PROPOSED R-20/25 SUBDIVISION

PENNY LANE SUBDIVISION

347, 349 & 389 MARION AVENUE

PROPERTY OWNERS: 347 & 349 MARION AVENUE
JERRY ALDIERI
5 RUY LANE
SOUTHINGTON, CONNECTICUT 06489

389 MARION AVENUE
MARION AVENUE ASSOCIATES, LLC
389 MARION AVENUE
PLANTSVILLE, CONNECTICUT 06479

DEVELOPER: LEPAGE HOMES, INC.
172 FLANDERS STREET
SOUTHINGTON, CONNECTICUT 06489
CONTACT DURING CONSTRUCTION: BILL LEPAGE, (860) 621-3262

LAND SURVEYING - LAND PLANNING: THE BONGIOVANNI GROUP, INC.
170 PANE ROAD
NEWINGTON, CONNECTICUT 06111
(860) 666-0134

CIVIL ENGINEERING: HALLISEY, PEARSON & CASSIDY
630 MAIN STREET, UNIT #1A
CROMWELL, CONNECTICUT 06416
(860) 529-6812

SOIL SCIENCE: SOIL RESOURCE CONSULTANTS
P.O. BOX 752
MERIDEN, CONNECTICUT 06450
(860) 919-4049

VICINITY MAP 1"=1000'

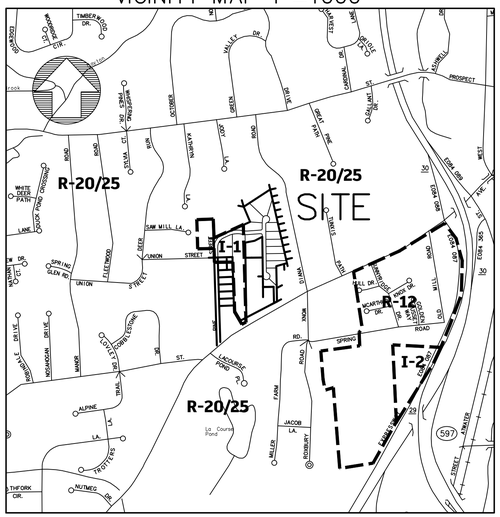

KEY MAP 1"=100'

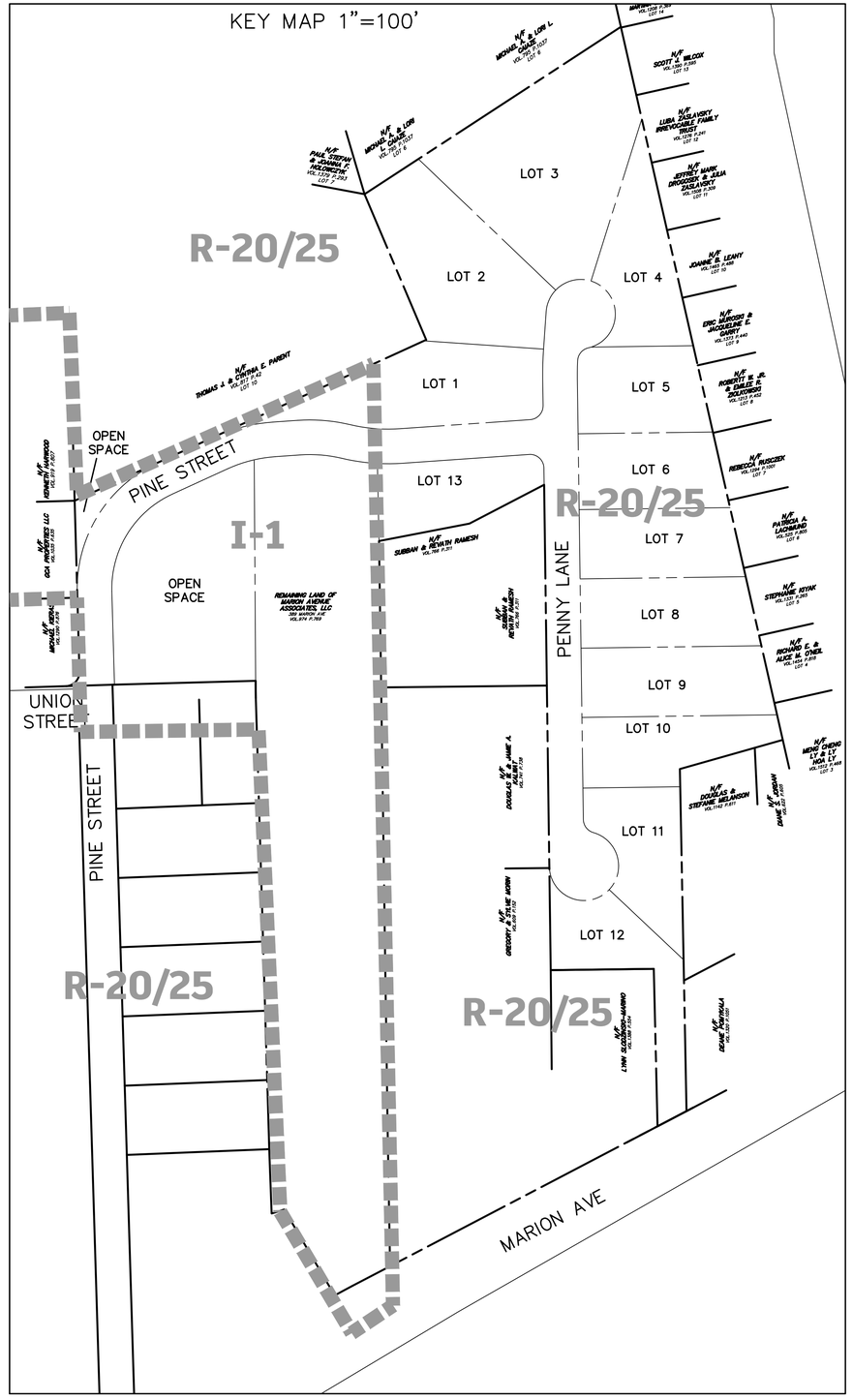

ZONING DATA

ZONE R–20/25 SUBDIVISION

MINIMUM LOT WIDTH – 100'
MINIMUM FRONT YARD – 40'
MINIMUM SIDE YARD – 20'
MINIMUM REAR YARD – 25'
MINIMUM LOT AREA – 22,500 S.F.
MAXIMUM LOT COVERAGE – 20%
MAXIMUM HEIGHT – 2.5 STORIES/35'

DRAWING INDEX

SHEET 1	COVER SHEET
SHEET 2	PROPERTY SURVEY
SHEET 3	EXISTING CONDITIONS MAP
SHEET 4–5	SUBDIVISION MAP
SHEET 6–7	GRADING PLAN
SHEET 8–9	EROSION & SEDIMENT CONTROL PLAN
SHEET 10–11	STREET PLAN & PROFILE
SHEET 12	SANITARY SEWER PLAN & PROFILE
SHEET 13	SANITARY SEWER DETAILS
SHEET 14	EROSION & SEDIMENT CONTROL DETAILS
SHEET 15	STORM WATER MANAGEMENT DETAILS
SHEET 16	SITE DETAILS
SHEET 17	WATER DETAILS

GENERAL NOTES:

1. HOUSE LOCATIONS AND ELEVATIONS ARE FOR THE PURPOSE OF DEMONSTRATING THAT ALL LOTS WILL SUPPORT DEVELOPMENT FOR THEIR INTENDED PURPOSE. THE PROPOSED HOUSES AS SHOWN ARE NOT INTENDED IN ANY WAY TO LIMIT THE SIZE, STYLE, LOCATION OR ELEVATION OF THE ACTUAL HOUSES TO BE BUILT.
2. TREES TO BE PLANTED AS PER SECTION 4–07 OF THE SOUTHINGTON SUBDIVISION REGULATIONS.
3. ALL DISTURBED AREAS TO BE TOP SOILED AND SEEDED.
4. LOT GRADING SHALL BE DONE TO PROVIDE SURFACE DRAINAGE AND PREVENT PONDING.
5. SANITARY SEWERAGE AND WATER SERVICE TO BE PROVIDED BY THE TOWN OF SOUTHINGTON.
6. VERTICAL DATUM = NORTH AMERICAN VERTICAL DATUM OF 1988 (NAVD 88). HORIZONTAL DATUM = NORTH AMERICAN DATUM OF 1983 (NAD 83).
7. ALL UTILITIES SHALL BE UNDERGROUND.
8. CONSTRUCTION OF ANY IMPROVEMENTS SHOWN SHALL BE IN ACCORDANCE WITH CTDOT, FORM 818, AS AMENDED, "STANDARD SPECIFICATIONS FOR ROAD, BRIDGES AND INCIDENTAL CONSTRUCTION", "TOWN OF SOUTHINGTON SPECIFICATIONS FOR CONSTRUCTION OF ROADS", "TOWN OF SOUTHINGTON ZONING REGULATIONS", "TOWN OF SOUTHINGTON SUBDIVISION REGULATIONS" AND THE CONNECTICUT LANDSCAPE ASSOCIATION'S "STANDARD SPECIFICATIONS FOR PLANTING TREES, SHRUBS, VINES, ETC." ARE TO BE USED FOR CONSTRUCTION STANDARDS.
9. SITE = 477,906 S.F. = 10.9712 ACRES.
10. ACCESS TO THE SITE DURING CONSTRUCTION SHALL BE THROUGH THE CONSTRUCTION ENTRANCE AS SHOWN ON THE PLANS AND NO OTHER ACCESS SHALL BE ALLOWED.
11. ACTUAL FIELD CONDITIONS MAY BE DIFFERENT OR CHANGED FROM THOSE CONDITIONS ASSUMED IN THE PREPARATION OF THIS PLAN AND IN SUCH CIRCUMSTANCES, THE TOWN ENGINEER MAY DIRECT THAT CERTAIN MODIFICATIONS OR AMENDMENTS BE EFFECTED AND CONSTRUCTED TO AMELIORATE SUCH CHANGED CONDITIONS.
12. THE CT DEEP NATURAL DIVERSITY DATABASE MAPS HAVE BEEN REVIEWED AND THERE ARE NO SPECIES OF CONCERN.

This subdivision is approved by the Planning and Zoning Commission of the Town of Southington, Connecticut

Signature

Date of Approval

Pursuant to Section 8 of the Connecticut General Statutes all work in connection with this subdivision shall be completed within five (5) years from the date of this approval.

Date: 6–27–22	Scale: AS SHOWN
Drawn: BTM	Checked: AB

Revision	Date
GENERAL REVISIONS	3–3–23

Sheet 1 of 17

21103

S:\SDSKPROJ\2021_jobs\21103\dwg\21103-Subdiv 121322.dwg

LEGEND

- PROPERTY LINE
- FENCE
- EXISTING MONUMENT
- MONUMENT TO BE SET
- EXISTING REBAR
- 5/8" REBAR TO BE SET

REFERENCE MAPS:

1. "BOUNDARY SURVEY, LAND OF PLANTSVILLE ACQUISITION, LLC, 389 MARION AVENUE, SOUTHINGTON, CONNECTICUT, PREPARED FOR A & A SURPLUS, INC." DATE 7-2-04, SCALE: 1"=60', BY CONKLIN & SOROKA, INC.
2. "SUBDIVISION MAP OF PROPERTY OF, OWNER, GENRI M. & ANITA S. PALMIERI, DEVELOPER, VILLA CONSTRUCTION, MARION AVE., SOUTHINGTON, CT, SCALE: 1"=40', JULY 22, 1987", BY KRATZERT & JONES.
3. "PROPERTY OF JOHN HENRY ANDREWS, MARION AVE., SOUTHINGTON, CONN., AUGUST 8, 1946, SCALE 1"=100'", BY CARL G. MATTSON.
4. "PORTION OF LAND OF HENRY M. WOLFF, SOUTHINGTON, CONN., OCT. 1955, SCALE 1"=100', W.C. LEFEVRE, C.E."
5. "PLAN SHOWING DIVISION OF LAND OF EDWARD KANIA, SOUTHINGTON, CONN., SCALE 1"=100', JUNE 1956", BY HENRY E. COLE.
6. "REVISED LAYOUT OF LOTS 13-14-15 AND 16, PROPERTY OF EDWARD KANIA, SOUTHINGTON, CONN., MAY 1958, SCALE 1"=40', OFFICE OF HARRY E. COLE, LAND SURVEYOR".
7. "RESUBDIVISION PLAN, KATHRYN ESTATES, PROSPECT STREET, SOUTHINGTON, CONNECTICUT, PREPARED FOR: LEPAGE HOMES, INC.", DATE 1-3-00, SCALE 1"=40', SHEET 4 OF 8, REVISED THROUGH 03-10-00, BY CONKLIN & SOROKA, INC.
8. "PROPERTY MAP PREPARED FOR BOYD W. HEIGHT, 333 MARION AVENUE, SOUTHINGTON, CONN., SCALE: 1"=40', DECEMBER 18, 1996", BY RUSSELL S. ANDRES.
9. "RECORD RESUBDIVISION MAP, PREPARED FOR RICHARD BARRY, 349 MARION AVENUE, SOUTHINGTON, CONNECTICUT, OCTOBER 17, 2011, SCALE: 1"=40'", REVISED THROUGH JAN. 30, 2012, BY HARRY E. COLE & SON.
10. "MAP SHOWING PROPERTY TO BE DEEDED TO THE MILL-ALL CO., OFF MARION AVE., SOUTHINGTON, CONN., SCALE 1"=40', MAR. 16, 1963", BY CARL G. MATTSON.
11. "PROPERTY & TOPOGRAPHIC SURVEY-PORTION OF PROPERTY OF FANSTEEL, INC., TO BE ACQUIRED BY LEPAGE HOMES, INC. AND PROPERTY OF LEPAGE HOMES, INC., PROSPECT STREET, SOUTHINGTON, CONNECTICUT", DATE 12-3-99, SCALE 1"=100', SHEET 1 OF 8, REVISED THROUGH 3-10-00, BY CONKLIN & SOROKA, INC.
12. "MAP OF PROPERTY OF JOSEPH J. & DOROTHY A. TRUSS AND ADJOINING PROPERTIES, PINE STREET, SOUTHINGTON, CONN., SCALE 1"=40', MARCH 11, 1977, BY RUSSELL S. ANDRES.
13. "MAP OF PROPERTY OF FANSTEEL METALLURGICAL CORPORATION, MARION AVENUE, SOUTHINGTON, CONN., SCALE 1"=100', APRIL, 1967", BY KRATZERT & JONES.
14. "ESTABLISHMENT OF STREET LINES ON UNION STREET, MARCH 1968, SCALE 1"=40', SOUTHINGTON, CONN., DOMINIC PERRY TOWN ENGINEER".
15. "TOWN OF SOUTHINGTON, CT, MARION AVENUE, STREET LINES, SCALE 1"=40', ROGER J. MULLINS, TOWN ENGINEER", SHEETS 2 & 3 OF 4.

GRAPHIC SCALE
0 30 60 120
(IN FEET)
1 inch = 60 ft.

BL COMcompanies
THE BONGIOVANNI GROUP, INC.
LAND SURVEYORS
170 Pane Road
Newington, Conn. 06111
TEL. (860) 666-0134
FAX (860) 666-3830

Date	Revision
3-3-23	GENERAL REVISIONS

Scale: 1"=60'
Checked: AB
Date: 6-27-22
Drawn: DJD / BTM

Line Table		
Line #	Direction	Length
L1	N86°00'33"E	35.94'
L2	S88°57'01"W	21.81'
L3	S62°19'59"W	23.52'
L4	S62°19'59"W	23.72'

ZONE R-20/25
ZONE I-1
ZONE R-20/25
ZONE R-20/25

UNION STREET
PINE STREET
MARION AVENUE
STREET LINE
50' WIDE PASSWAY RIGHTS VOL.169 P.607 CL&P EASEMENT VOL.170 P.350
S88°13'15"W 69.72'
Δ=89°13'30" R=20.00' L=31.14'
N/F MICHAEL KIERAS VOL.1290 P.876
N/F GCA PROPERTIES LLC VOL.1035 P.635
N/F KENNETH HARWOOD VOL.919 P.807
CLP 2125
CLP 1
24' CHAIN LINK FENCE
N01°36'24"W 247.19'
BIT. DRIVE
UPOLE 617
CLP 89912
CLP 89923
CLP 89923
50' WIDE PASSWAY RIGHTS AND RIGHTS TO INSTALL UTILITIES VOL.197 P.787, VOL.204 P.506
6' STOCKADE FENCE
3/4" I.P. FOUND OFF 0.22'-E 0.73'-N
N/F RIZZUTO, JOHN M. & PATRICIA M. C. VOL.1039 P.1
203.83'
SHED
151.62'
25'
25'
S88°27'34"W
152.21'
6' CHAIN LINK FENCE W/BARBED WIRE
S01°21'06"E 298.97'
N65°23'47"E 20.37'
CALC.
6'WOOD STOCKADE FENCE
PORTION OF UNION STREET ABANDONED VOL.7 P.506
Δ=20°36'45" R=200.00' L=71.95'
L1
N65°23'47"E 558.03'
THOMAS J. & CYNTHIA E. PARENT VOL.817 P.42 LOT 10
N/F BUMBERA, KIMBERLY VOL.1527 P.598
N/F WANG, CHARLES C & YU-MEI TRUSTEES VOL.1533 P.275
N/F SITA, MICHAEL A & BRANT, LEANDRA E VOL.1271 P.1007
N/F ZAYAS, MARY VOL.684 P.879
N/F MARTIN, PAULA E & MASTRIANNI, LINDA VOL.1244 P.999
N/F FUNICELLI, ALLISON M VOL.912 P.211
N/F FRANZO, SANTO & MAROA J VOL.559 P.59
S72°34'27"W 19.00'
N02°11'54"W 84.16'
N01°41'53"W 436.45'
N01°42'33"W 223.69'
N30°25'33"W 143.89'
1/2" IR FOUND OFF 2.50'-S
5"X5" CONC. MON. FOUND ON PROPERTY LINE
1" I.P. FOUND OFF 0.23'-W
1-1/4" I.P. FOUND OFF 0.21'-W
N00°42'23"W 25.00'
REMAINING LAND OF MARION AVENUE ASSOCIATES, LLC
389 MARION AVE
AREA=221,872 S.F.
=5.0935 AC.
ORIGINAL PARCEL AREA
537,555 (12.3406 AC.)
VOL.974 P.769
6' CHAIN LINK FENCE W/BARBED WIRE
BIT. LOT
Δ=14°18'20" R=200.00' L=49.94'
Δ=12°11'28" R=290.00' L=61.70'
PROPOSED PROPERTY LINE
N/F PAUL STEFAN & JOANNA F. HOLOWCZYK VOL.1379 P.293 LOT 7
8'± WIDE TRAIL
N22°55'44"W 228.26'
Δ=1°34'17" R=1065.98' L=29.24'
S62°22'52"W 61.12'
197.89' S01°00'08"E
849.24' S00°50'22"E
117.04' S01°13'00"E
N/F SUBBAN & REVATH RAMESH VOL.766 P.311
5"X5" CONC. MON. FOUND ON PROPERTY CORNER
N/F SUBBAN & REVATH RAMESH VOL.766 P.311
1" I.P. FOUND OFF 0.83'-S 5.07'-E
N30°50'57"W 132.86'
S62°31'50"W 121.58'
5/8" REBAR FOUND ON PROPERTY LINE
1 1/4" I.P. FOUND OFF 0.17'-S
N64°33'48"E 159.86'
N63°41'05"E 101.31'
LAND TO BE ACQUIRED BY LEPAGE HOMES, INC. FROM MARION AVENUE ASSOCIATES, LLC
AREA=315,683 S.F.
=7.2471 AC.
N/F MICHAEL A. CIANCI & LORI L VOL.735 P.1037 LOT 6
N56°51'34"E 447.80'
5/8" REBAR FOUND ON PROPERTY CORNER
N/F GREGORY & SYLVIE MORIN VOL.609 P.152
5/8" REBAR FOUND ON PROPERTY LINE
N/F DOUGLAS W. & JAMIE A. KALWAT VOL.741 P.738
SHED
N00°46'34"W 700.79'
1-1/4" I.P. FOUND OFF 0.30'-E 0.23'-N
N/F JERRY ALDIERI TO BE ACQUIRED BY LEPAGE HOMES, INC.
VOL.1292 P.734
349 MARION AVE
AREA=114,374 S.F.
=2.6257 AC.
N/F LYNN SLODZINSKI-MARINO VOL.1388 P.554
1/2" I.P. FOUND ON PROPERTY CORNER
1" I.P. FOUND OFF 0.50'-N
CONC. MON. FOUND
STEEL POST
S89°18'35"W 148.78'
CLP 85172
N01°21'40"W 227.33'
226.57' S00°46'28"E
2" I.P. FOUND ON PROPERTY CORNER
491.04' S01°12'18"E
1" I.P. FOUND ON PROPERTY CORNER
L2
SHED
SHED
CLP 85171
2" I.P. FOUND ON PROPERTY CORNER
CLP 5755
CLP 5756 BIT. DRIVEWAY
4' BOX WIRE FENCE
3' FENCE
5/8" REBAR FOUND ON PROPERTY LINE
N/F DEANE POMYKALA VOL.1320 P.1051
493.96' S01°07'07"E
LAWN
DEC. PLANTS
GRAVEL
EXISTING HOUSE
1/2" I.P. FOUND ON PROPERTY CORNER
N/F JERRY ALDIERI TO BE ACQUIRED BY LEPAGE HOMES, INC.
VOL.1292 P.735
347 MARION AVE
AREA=86,518 S.F.
=1.9862 AC.
N/F DOUGLAS & STEFANIE MELANSON VOL.1142 P.611
N/F DIANE S. JORDAN VOL.622 P.605
2" I.P. FOUND ON PROPERTY LINE
1 1/4" I.P. FOUND OFF 1.28'-W 0.83'-N
N/F MENG & CHENG LY & LINDA LY VOL.1312 P.468 LOT 3
N/F RICHARD E. & ALICE M. ONEIL VOL.454 P.818 LOT 4
N/F PATRICIA A. LACHMANN VOL.1312 P.265 LOT 6
N/F STEPHANIE KYTAK VOL.1331 P.265 LOT 5
N/F REBECCA RUSCZEK VOL.1264 P.1101 LOT 7
N/F ROBERT W. & EILEEN R. ZIOLKOWSKI VOL.1201 P.1042 LOT 8
N/F ERIC & JACQUELINE E. GARRY VOL.1323 P.940 LOT 9
N/F JEFFREY & MARK DROOGOSZ & JULIA ZASKOVSKY VOL.1508 P.509 LOT 11
N/F ZASKOVSKY IRREVOCABLE FAMILY TRUST VOL.1508 P.741 LOT 12
N/F JOANNE B. LEAHY VOL.1465 P.488 LOT 10
N/F SCOTT J. & MILCOX VOL.1380 P.1485 LOT 14
N/F MARTINA O. BURKE VOL.1208 P.1093 LOT 15
S12°47'29"E 494.09'
S12°47'29"E 561.44'
SHED
GATE
6' VINYL STOCKADE FENCE
4' VINYL FENCE
1/2" REBAR FOUND OFF 0.26'-W
5/8" REBAR FOUND ON PROPERTY LINE
5/8" REBAR FOUND OFF 2.36'-W
I.P. FOUND OFF 0.62'-W
1" I.R. FOUND OFF 0.52'-W
1" I.R. FOUND OFF 0.38'-W
PAVERS
ALUMINUM POLE
1" I.P. FOUND OFF 0.85'-W 0.79'-S
RR TIE RETAINING WALL
CONC. HEADWALL
6' WOOD STOCKADE FENCE
SHED BRIDGE
DRAINAGE EASEMENT

NAD83

NOTES:

1. THIS SURVEY HAS BEEN PREPARED PURSUANT TO THE REGULATIONS OF CONNECTICUT STATE AGENCIES SECTIONS 20-300b-1 THROUGH 20-300b-20, AS REVISED.

   TYPE OF SURVEY: BOUNDARY SURVEY

   BOUNDARY DETERMINATION CATEGORY: RESURVEY

   CLASS OF HORIZONTAL ACCURACY: A-2

2. HORIZONTAL DATUM BASED ON NAD83.
4. THIS MAP IS VALID ONLY IF IT BEARS THE ORIGINAL SIGNATURE AND EMBOSSED SEAL OF THE UNDERSIGNED LAND SURVEYOR.

TO MY KNOWLEDGE AND BELIEF, THIS MAP IS SUBSTANTIALLY CORRECT AS NOTED HEREON.

3-3-2023 — DATE
14649 — LICENSE NUMBER
SURVEYOR'S SIGNATURE

21103

PENNY LANE SUBDIVISION
PREPARED FOR
LEPAGE HOMES, INC.
347, 349 & 389 MARION AVENUE
SOUTHINGTON, CONNECTICUT

PROPERTY SURVEY

Sheet 2 of 17

S:\SDSKPROJ\2021_jobs\21103.dwg\21103-BNDY-OVERALL.dwg

REFERENCE MAPS:

1. "BOUNDARY SURVEY, LAND OF PLANTSVILLE ACQUISITION, LLC, 389 MARION AVENUE, SOUTHINGTON, CONNECTICUT, PREPARED FOR A & A SURPLUS, INC." DATE 7-2-04, SCALE 1"=60', BY CONKLIN & SOROKA, INC.
2. "SUBDIVISION MAP OF PROPERTY OF, OWNER, GENRI M. & ANITA S. PALMIERI, DEVELOPER, VILLA CONSTRUCTION, MARION AVE., SOUTHINGTON, CT, SCALE: 1"=40', JULY 22, 1987", BY KRATZERT & JONES.
3. "PROPERTY OF JOHN HENRY ANDREWS, MARION AVE., SOUTHINGTON, CONN., AUGUST 8, 1946, SCALE 1"=100'", BY CARL G. MATTSON.
4. "PORTION OF LAND OF HENRY M. WOLFF, SOUTHINGTON, CONN., OCT. 1955, SCALE 1"=100', W.C. LEFEVRE, C.E."
5. "PLAN SHOWING DIVISION OF LAND OF EDWARD KANIA, SOUTHINGTON, CONN., SCALE 1"=100', JUNE 1956", BY HENRY E. COLE.
6. "REVISED LAYOUT OF LOTS 13-14-15 AND 16, PROPERTY OF EDWARD KANIA, SOUTHINGTON, CONN., MAY 1958, SCALE 1"=40', OFFICE OF HARRY E. COLE, LAND SURVEYOR".
7. "RESUBDIVISION PLAN, KATHRYN ESTATES, PROSPECT STREET, SOUTHINGTON, CONNECTICUT, PREPARED FOR: LEPAGE HOMES, INC.", DATE 1-3-00, SCALE 1"=40', SHEET 4 OF 8, REVISED THROUGH 03-10-00, BY CONKLIN & SOROKA, INC.
8. "PROPERTY MAP PREPARED FOR BOYD W. HEIGHT, 333 MARION AVENUE, SOUTHINGTON, CONN., SCALE: 1"=40', DECEMBER 18, 1996", BY RUSSELL S. ANDRES.
9. "RECORD RESUBDIVISION MAP, PREPARED FOR RICHARD BARRY, 349 MARION AVENUE, SOUTHINGTON, CONNECTICUT, OCTOBER 17, 2011, SCALE: 1"=40", REVISED THROUGH JAN. 30, 2012, BY HARRY E. COLE & SON.
10. "MAP SHOWING PROPERTY TO BE DEEDED TO THE MILL-ALL CO., OFF MARION AVE., SOUTHINGTON, CONN., SCALE 1"=40', MAR. 16, 1963", BY CARL G. MATTSON.
11. "PROPERTY & TOPOGRAPHIC SURVEY--PORTION OF PROPERTY OF FANSTEEL INC., TO BE ACQUIRED BY LEPAGE HOMES, INC. AND PROPERTY OF LEPAGE HOMES, INC., PROSPECT STREET, SOUTHINGTON, CONNECTICUT", DATE 12-3-99, SCALE 1"=100', SHEET 1 OF 8, REVISED THROUGH 3-10-00, BY CONKLIN & SOROKA, INC.
12. "MAP OF PROPERTY OF JOSEPH J. & DOROTHY A. TRUSS AND ADJOINING PROPERTIES, PINE STREET, SOUTHINGTON, CONN., SCALE 1"=40', MARCH 11, 1977, BY RUSSELL S. ANDRES.
13. "MAP OF PROPERTY OF FANSTEEL METALLURGICAL CORPORATION, MARION AVENUE, SOUTHINGTON, CONN., SCALE 1"=100', APRIL, 1967", BY KRATZERT & JONES.
14. "ESTABLISHMENT OF STREET LINES ON UNION STREET, MARCH 1968, SCALE 1"=40', SOUTHINGTON, CONN., DOMINIC PERRY TOWN ENGINEER".
15. "TOWN OF SOUTHINGTON, CT, MARION AVENUE, STREET LINES, SCALE 1"=40', ROGER J. MULLINS, TOWN ENGINEER", SHEETS 2 & 3 OF 4.

SOIL TYPES	
SOIL NUMBER	NAME
Wa (13)	Walpole
Pn (35)	Penwood
Ud (306)	Udorthents

LEGEND – EXISTING

- PROPERTY LINE
- FENCE
- EXISTING ELEVATION CONTOUR
- EXISTING SPOT ELEVATION
- EXISTING WATER LINE
- EXISTING MANHOLE
- EXISTING GAS MAIN
- EXISTING CATCH BASIN
- EXISTING TREE LINE
- SIGN
- UTILITY POLE
- GUY WIRE
- WATER GATE
- EXISTING HYDRANT
- TREE
- GUIDE RAIL
- OVERHEAD WIRES
- ELECTRIC METER
- SHRUB
- TRAFFIC CONTROL BOX
- LIMIT OF WETLANDS BY SOIL TYPE
- LIMIT OF WETLANDS BY TOWN MAP
- WETLAND FLAG NUMBER / LOCATION
- BORING LOCATION
- SOIL TYPE SYMBOL

GRAPHIC SCALE
(IN FEET)
1 inch = 60 ft.

Line Table		
Line #	Direction	Length
L1	N86°00'33"E	35.94'
L2	S88°57'01"W	21.81'
L3	S62°19'59"W	23.52'
L4	S62°19'59"W	23.72'

THIS DRAWING HAS BEEN PREPARED BASED, IN PART, ON INFORMATION PROVIDED BY OTHERS RELATING TO THE LOCATION OF UNDERGROUND SERVICES. WE CAN NOT VERIFY THE ACCURACY OF THIS INFORMATION AND SHALL NOT BE HELD RESPONSIBLE FOR ANY ERRORS OR OMISSIONS WHICH MAY BE INCORPORATED HEREIN AS A RESULT.
INDICATED UNDERGROUND UTILITIES ARE BASED ON AVAILABLE DATA. THE LOCATIONS ARE APPROXIMATE AND ALL UTILITIES MAY NOT BE SHOWN. CALL "CALL B-4-U DIG" AT 1-800-922-4455 PRIOR TO ANY EXCAVATION.

NOTES:

1. THIS SURVEY HAS BEEN PREPARED PURSUANT TO THE REGULATIONS OF CONNECTICUT STATE AGENCIES SECTIONS 20-300b-1 THROUGH 20-300b-20, AS REVISED.

   TYPE OF SURVEY: TOPOGRAPHIC SURVEY

   BOUNDARY DETERMINATION CATEGORY: RESURVEY

   CLASS OF HORIZONTAL ACCURACY: A-2

   CLASS OF VERTICAL ACCURACY: T-2

2. HORIZONTAL DATUM BASED ON NAD83.
3. ELEVATIONS BASED ON NAVD88.
4. THIS MAP IS VALID ONLY IF IT BEARS THE ORIGINAL SIGNATURE AND EMBOSSED SEAL OF THE UNDERSIGNED LAND SURVEYOR.

TO MY KNOWLEDGE AND BELIEF, THIS MAP IS SUBSTANTIALLY CORRECT AS NOTED HEREON.

3/3/2023
SURVEYOR'S SIGNATURE — DATE — LICENSE NUMBER 14649

21103

BSC
THE BONGIOVANNI GROUP, INC.
LAND SURVEYORS
170 Russell Road
Newington, Conn. 06111
TEL. (860) 666-0134
FAX (860) 666-3830

Scale: 1"=60'
Checked: AB
Date: 3-3-23
Revision: GENERAL REVISIONS
Date: 3-4-22
Drawn: DJD / BTM

PENNY LANE SUBDIVISION
PREPARED FOR
LEPAGE HOMES, INC.
347, 349 & 389 MARION AVENUE
SOUTHINGTON, CONNECTICUT

EXISTING CONDITIONS

Sheet 3 of 17

S:\SDSKPROJ\2021_jobs\21103\dwg\21103-BNDY-OVERALL.dwg

Curve Table			
Curve #	Delta	Radius	Length
C1	89°13'30"	20.00'	31.14'
C2	67°00'11"	200.00'	233.88'
C3	20°36'45"	250.00'	89.94'
C4	14°18'20"	250.00'	62.42'
C5	14°18'20"	240.00'	59.92'
C6	86°47'06"	20.00'	30.29'
C7	4°43'53"	525.00'	43.35'
C8	39°44'41"	50.00'	34.68'
C9	63°39'43"	50.00'	55.56'
C10	144°54'35"	50.00'	126.46'
C11	4°55'33"	50.00'	4.30'
C12	74°51'56"	20.00'	26.13'
C13	3°06'30"	475.00'	25.77'
C14	73°23'54"	20.00'	25.62'
C15	117°28'13"	50.00'	102.51'
C16	135°55'40"	50.00'	118.62'
C17	93°12'52"	20.00'	32.54'
C18	2°06'52"	290.00'	10.70'
C20	12°11'28"	290.00'	61.70'
C21	20°36'45"	200.00'	71.95'
C22	67°00'11"	150.00'	175.41'
C23	14°18'20"	200.00'	49.94'
C24	20°36'45"	200.00'	71.95'

Line Table		
Line #	Direction	Length
L1	N86°00'33"E	35.94'

Parcel Table		
LOT #	Area (SQ. FT.)	AREA (AC.)
LOT 1	33,432	0.7675
LOT 2	42,313	0.9714
LOT 3	63,754	1.4636
LOT 4	25,259	0.5799
LOT 5	22,524	0.5171
LOT 6	22,573	0.5182
LOT 7	22,844	0.5244
LOT 8	24,972	0.5733
LOT 9	27,101	0.6221
LOT 10	22,575	0.5182
LOT 11	22,535	0.5173
LOT 12	25,323	0.5813
LOT 13	22,517	0.5169
OPEN SPACE 1	3,088	0.0709
OPEN SPACE 2	38,814	0.8910

LEGEND

- PROPERTY LINE
- FENCE
- BUILDING SETBACK LINE
- EXISTING MONUMENT
- MONUMENT TO BE SET
- EXISTING REBAR
- 5/8" REBAR TO BE SET
- F.Y. FRONT YARD
- S.Y. SIDE YARD
- R.Y. REAR YARD

MATCH LINE A (THIS SHEET)

N 774,816.94
E 956,509.01

1" I.R. FOUND OFF 0.85'-W 0.79'-S

N/F MARTINA O. BURKE VOL.1208 P.369 LOT 14

DRAINAGE EASEMENT

CONC. HEADWALL

WOOD BRIDGE

BROOK

N/F MICHAEL A. & LORI L. CAIAZE VOL.795 P.1037 LOT 6

N/F SCOTT J. WILCOX VOL.1390 P.595 LOT 13

SHED

S12°47'29"E 619.19'

N56°51'34"E 348.95'

25' R.Y.

LOT 3

MATCH LINE A (THIS SHEET)

N/F PAUL STEFAN & JOANNA F. HOLOWCZYK VOL.1379 P.293 LOT 7

N/F MICHAEL A. & LORI L. CAIAZE VOL.795 P.1037 LOT 6

N 774,575.41
E 956,139.08

PATIO

N56°51'34"E 348.95'

N56°51'34"E 92.85'

25' R.Y.

20' S.Y.

N45°17'59"W 273.99'

N22°55'44"W 228.26'

CONSERVATION EASEMENT

NOTE: LIMIT OF CONSERVATION EASEMENT AT WORK AREA ON LOTS 1-4 SHALL BE DELINEATED BY BOULDERS PLACED 10' ON CENTER AND SIGNAGE PLACED 50' ON CENTER

LOT 3
63,754 S.F.
1.4636 AC.

N/F LUBA ZASLAVSKY IRREVOCABLE FAMILY TRUST VOL.1276 P.241 LOT 12

N/F JEFFREY MARK DROGOSEK & JULIA ZASLAVSKY VOL.1508 P.309 LOT 11

N73°48'01"E 84.67'

S57°01'36"W 105.20'

N17°21'44"E 245.25'

N48°31'12"W 85.41'

20' S.Y.

195.00'

SHED

S12°47'29"E 335.77'

1" I.R. FOUND OFF 0.52'-W

80' BUILDABLE SQUARE (TYP.)

LOT 4
25,259 S.F.
0.5799 AC.

N/F JOANNE B. LEAHY VOL.1465 P.488 LOT 10

SHED

1" I.R. FOUND OFF 0.38'-W

N/F ERIC MUROSKI & JACQUELINE E. GARRY VOL.1373 P.440 LOT 9

LOT FRONTAGE AT B.L.=100.00'

LOT 2
42,313 S.F.
0.9714 AC.

S06°19'55"E 108.55'

Δ=38°53'23" R=125.00' L=84.84'

PT: 18+54.14

C9

EP: 19+10.22

19+00

C8

C10

N65°23'47"E 3.55'

N03°57'19"E 54.14'

40' F.Y.

20' S.Y.

S86°02'41"E 173.08'

S38°00'04"E 32.23'

S63°09'27"W 39.38'

N83°23'01"W 97.81'

20.58'

PC: 17+70.00

18+00

C7

C11

C12

N89°13'26"E 147.24'

N/F THOMAS J. & CYNTHIA E. PARENT VOL.817 P.42 LOT 10

Δ=14°18'20" R=265.00' L=66.16'

N65°23'47"E 334.86'

25' R.Y.

LOT 1
33,432 S.F.
0.7675 AC.

AREA OF LOT 1 IN ZONE I-1 8,211 S.F.

AREA OF LOT 1 IN ZONE R-20/25 25,221 S.F.

PC: 4+51.48

PT: 5+32.42

PC: 5+68.36

PRC: 6+36.44

PT: 6+80.71

40' F.Y.

C6

N00°46'34"W 31.19'

LANE

N00°46'34"W 79.64'

17+00

C13

LOT 5
22,524 S.F.
0.5171 AC.

20' S.Y.

40' F.Y.

25' R.Y.

127.75'

S12°47'29"E

I.P. FOUND OFF 0.62'-W

N/F ROBERTT W. JR. & EMILEE R. ZIOLKOWSKI VOL.1213 P.452 LOT 8

N89°13'26"E 194.49'

5/8" REBAR FOUND OFF 2.36'-W

PASSWAY RIGHTS AND RIGHTS TO INSTALL UTILITIES VOL.197 P.787, VOL.204 P.506

PT: 3+54.24

N65°23'47"E 87.23'

PINE STREET

N86°00'33"E 35.94'

C1 C2 C3 C4 C5 C20 C23 C24

1+00 2+00 3+00 4+00 5+00 6+00 7+00 8+00 9+00

N86°00'33"E 213.88'

N86°00'33"E 208.82'

C17

C18

9+47

PENNY LANE, Sta=16+85.80
PINE STREET (2), Sta=9+47.13

LOT 6
22,573 S.F.
0.5182 AC.

N00°46'34"W 109.50'

40' F.Y.

25' R.Y.

20' S.Y.

111.95'

S12°47'29"E

5/8" REBAR FOUND

N/F REBECCA RUSZCZEK VOL.1294 P.1001 LOT 7

N89°13'26"E 217.80'

SHED

N/F PATRICIA A. LACHMUND VOL.525 P.805 LOT 6

N/F GCA PROPERTIES LLC VOL.1035 P.835

N 774,132.86
E 955,720.64

OPEN SPACE 1 TO BE DEEDED TO THE TOWN OF SOUTHINGTON
3,088 S.F.
0.0709 AC.

CLP 1

CLP 88923

N01°36'24"W 132.38'

50'

PC: 1+59.60

Δ=67°00'11" R=175.00' L=204.65'

C22

C21

Δ=20°36'45" R=225.00' L=80.95'

Δ=14°18'20" R=225.00' L=56.18'

OPEN SPACE 2 TO BE DEEDED TO THE TOWN OF SOUTHINGTON
38,814 S.F.
0.8910 AC.

298.97'

S01°21'06"E

REMAINING LAND OF MARION AVENUE ASSOCIATES, LLC
389 MARION AVE
VOL.974 P.769

ZONE I-1

ZONE R-20/25

N 774,074.71
E 956,159.97

5"X5" CONC. MON. FOUND HELD

5/8" REBAR FOUND

N/F SUBBAN & REVATH RAMESH VOL.766 P.311

ZONE R-20/25

N01°13'00"W 117.04'

20' S.Y.

40' F.Y.

25' R.Y.

LOT 13
22,517 S.F.
0.5169 AC.

1 1/4" I.P. FOUND OFF 0.17'-S

S00°46'35"E 31.20'

121.58'

S62°51'50"W

132.86'

S79°05'30"W

1" I.P. FOUND OFF 0.93'-S

PENNY LANE

N00°46'34"W 100.00'

LOT 7
22,844 S.F.
0.5244 AC.

N89°13'26"E 239.08'

102.24'

S12°47'29"E

1/2" REBAR FOUND OFF 0.26'-W

N/F STEPHANIE KIYAK VOL.1331 P.265 LOT 5

N00°46'34"W 100.00'

LOT 8
24,972 S.F.
0.5733 AC.

N89°13'26"E 260.37'

SHED

N/F RICHARD E. & ALICE M. O'NEIL VOL.1454 P.818 LOT 4

N00°46'34"W 100.00'

LOT 9
27,101 S.F.
0.6221 AC.

N89°13'26"E 281.65'

N/F SUBBAN & REVATH RAMESH VOL.766 P.311

N00°46'34"W 551.00'

1 1/2" I.P. FOUND OFF 0.30'-E 0.23'-N

15+00

16+00

14+00

13+00

N/F KENNETH HARWOOD VOL.919 P.807

UPOLE 617

CLP 2125

N/F MICHAEL KIERAS VOL.1290 P.876

N01°36'24"W 114.81'

1+00

N01°36'24"W 134.60'

PASSWAY RIGHTS VOL.169 P.607 CL&P EASEMENT VOL.170 P.350

C1

69.72'

S88°13'15"W

UNION STREET

PINE STREET

0+00

PORTION OF UNION STREET ABANDONED VOL.7 P.506

3/4" I.P. FOUND OFF 0.22'-E 0.73'-N

151.62'

S88°27'34"W

SHED

25'

1 1/2" I.P. FOUND OFF 0.21'-W

1" I.P. FOUND OFF 0.23'-W

SURVEY NOTES:

1. THIS SURVEY HAS BEEN PREPARED PURSUANT TO THE REGULATIONS OF CONNECTICUT STATE AGENCIES SECTIONS 20-300b-1 THROUGH 20-300b-20, AS REVISED.

   TYPE OF SURVEY: ORIGINAL SURVEY

   BOUNDARY DETERMINATION CATEGORY: RESURVEY

   CLASS OF HORIZONTAL CONTROL: A-2
   BOUNDARY ACCURACY: A-2

   INTENDED USE: SUBDIVISION MAP

2. HORIZONTAL DATUM IS BASED ON STATE PLANE, NAD 83.

3. SUBJECT PARCEL IS IN ZONE CLASSIFICATION R-20/25.

4. THIS MAP IS VALID ONLY IF IT BEARS THE ORIGINAL SIGNATURE AND EMBOSSED SEAL OF THE UNDERSIGNED LAND SURVEYOR.

TO MY KNOWLEDGE AND BELIEF, THIS MAP IS SUBSTANTIALLY CORRECT AS NOTED HEREON.

SURVEYOR'S SIGNATURE — 3.3.2023 DATE — 14649 LICENSE NUMBER

MATCH LINE B (SHEET 5 OF 17)

21103

NAD83

GRAPHIC SCALE
(IN FEET)
1 inch = 40 ft.
40 0 20 40 80

THE BONGIOVANNI GROUP, INC.
LAND SURVEYORS
170 Pond Street
Newington, Conn. 06111
TEL. (860) 666-6134
FAX (860) 666-3935

Scale: 1"=40'
Checked: AB
Date: 6-27-22
Drawn: BTM
Date: 3-3-23

Revision	Date
GENERAL REVISIONS	3-3-23

PENNY LANE SUBDIVISION
PREPARED FOR
LEPAGE HOMES, INC.
347, 349 & 389 MARION AVENUE
SOUTHINGTON, CONNECTICUT

ORIGINAL SURVEY (SUBDIVISION PLAN)

Sheet 4 of 17

S:\SDSKPROJ\2021_jobs\21103\dwg\21103 Subdiv 121322.dwg

LEGEND

- PROPERTY LINE
- FENCE
- BUILDING SETBACK LINE
- EXISTING MONUMENT
- MONUMENT TO BE SET
- EXISTING REBAR
- 5/8" REBAR TO BE SET
- F.Y. FRONT YARD
- S.Y. SIDE YARD
- R.Y. REAR YARD

Curve Table			
Curve #	Delta	Radius	Length
C1	89°13'30"	20.00'	31.14'
C2	67°00'11"	200.00'	233.88'
C3	20°36'45"	250.00'	89.94'
C4	14°18'20"	250.00'	62.42'
C5	14°18'20"	240.00'	59.92'
C6	86°47'06"	20.00'	30.29'
C7	4°43'53"	525.00'	43.35'
C8	39°44'41"	50.00'	34.68'
C9	63°39'43"	50.00'	55.56'
C10	144°54'35"	50.00'	126.46'
C11	4°55'33"	50.00'	4.30'
C12	74°51'56"	20.00'	26.13'
C13	3°06'30"	475.00'	25.77'
C14	73°23'54"	20.00'	25.62'
C15	117°28'13"	50.00'	102.51'
C16	135°55'40"	50.00'	118.62'
C17	93°12'52"	20.00'	32.54'
C18	2°06'52"	290.00'	10.70'
C20	12°11'28"	290.00'	61.70'
C21	20°36'45"	200.00'	71.95'
C22	67°00'11"	150.00'	175.41'
C23	14°18'20"	200.00'	49.94'
C24	20°36'45"	200.00'	71.95'

Parcel Table		
LOT #	Area (SQ. FT.)	AREA (AC.)
LOT 1	33,432	0.7675
LOT 2	42,313	0.9714
LOT 3	63,754	1.4636
LOT 4	25,259	0.5799
LOT 5	22,524	0.5171
LOT 6	22,573	0.5182
LOT 7	22,844	0.5244
LOT 8	24,972	0.5733
LOT 9	27,101	0.6221
LOT 10	22,575	0.5182
LOT 11	22,535	0.5173
LOT 12	25,323	0.5813
LOT 13	22,517	0.5169
OPEN SPACE 1	3,088	0.0709
OPEN SPACE 2	38,814	0.8910

Line Table		
Line #	Direction	Length
L1	N86°00'33"E	35.94'

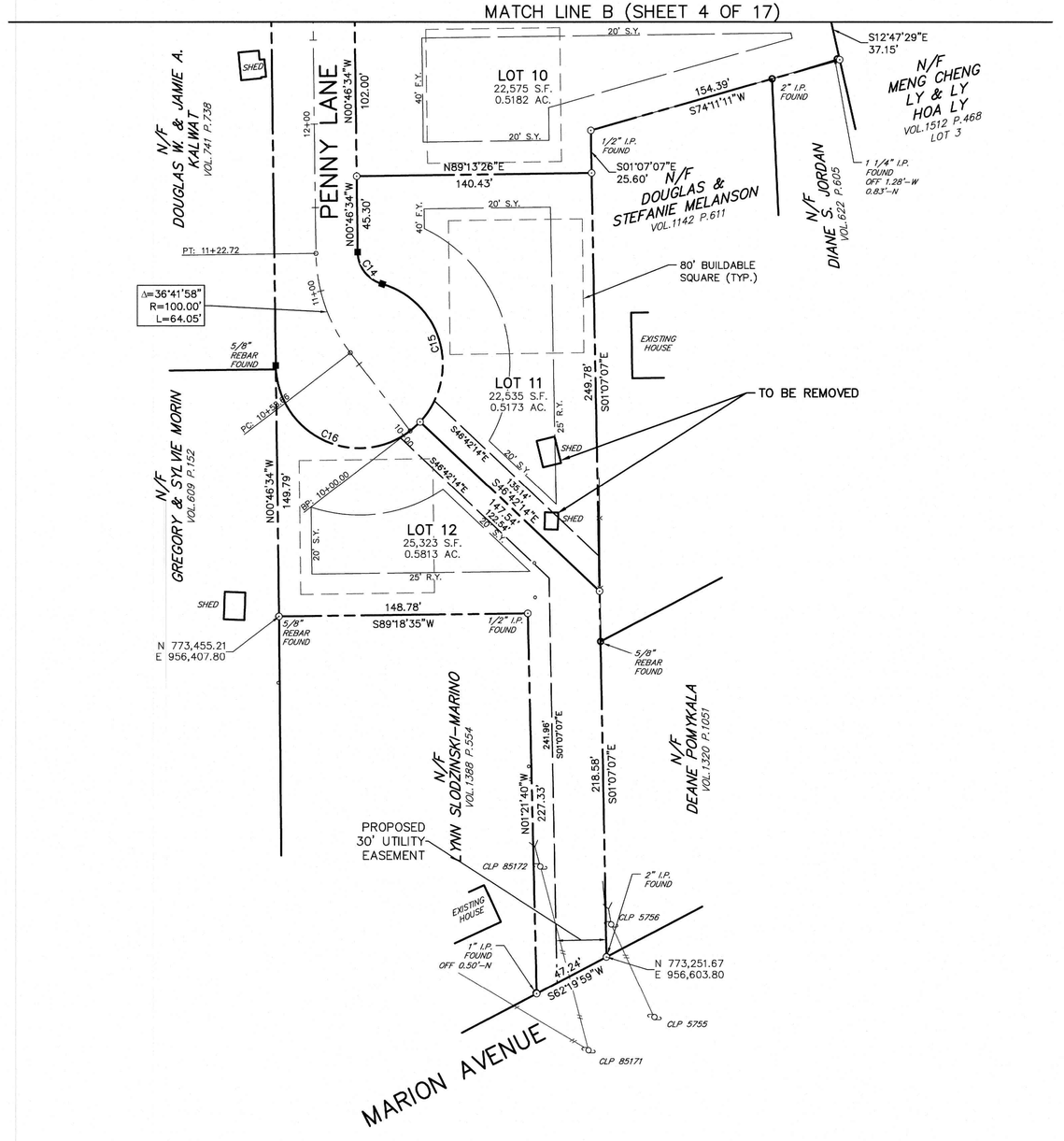

NAD83

GRAPHIC SCALE
0 20 40 80
(IN FEET)
1 inch = 40 ft.

THE BONGIOVANNI GROUP, INC.
LAND SURVEYORS
1770 Silas Deane Highway
Newington, Conn. 06111
TEL. (860) 666-0134
FAX (860) 666-3830

Scale: 1"=40'
Checked: AB
Date: 3-3-23
Date: 6-27-22
Drawn: BTM

Revision	Date
GENERAL REVISIONS	3-3-23

PENNY LANE SUBDIVISION
PREPARED FOR
LEPAGE HOMES, INC.
347, 349 & 389 MARION AVENUE
SOUTHINGTON, CONNECTICUT

ORIGINAL SURVEY (SUBDIVISION PLAN)

Sheet 5 of 17

SURVEY NOTES:

1. THIS SURVEY HAS BEEN PREPARED PURSUANT TO THE REGULATIONS OF CONNECTICUT STATE AGENCIES SECTIONS 20-300b-1 THROUGH 20-300b-20, AS REVISED.

   TYPE OF SURVEY: ORIGINAL SURVEY

   BOUNDARY DETERMINATION CATEGORY: RESURVEY

   CLASS OF HORIZONTAL CONTROL: A-2
   BOUNDARY ACCURACY: A-2

   INTENDED USE: SUBDIVISION MAP

2. HORIZONTAL DATUM IS BASED ON STATE PLANE, NAD 83.
3. SUBJECT PARCEL IS IN ZONE CLASSIFICATION R-20/25.
4. THIS MAP IS VALID ONLY IF IT BEARS THE ORIGINAL SIGNATURE AND EMBOSSED SEAL OF THE UNDERSIGNED LAND SURVEYOR.

TO MY KNOWLEDGE AND BELIEF, THIS MAP IS SUBSTANTIALLY CORRECT AS NOTED HEREON.

SURVEYOR'S SIGNATURE — DATE: 3-3-2023 — LICENSE NUMBER: 14649

21103

S:\SDSKPRO\2021_jobs\21103\dwg\21103 Subdiv 121322.dwg

SITE DEVELOPMENT NOTES:

1. EXISTING TREES AND SHRUBS SHALL BE PRESERVED WHEREVER PRACTICAL AND/OR DESIRABLE. ALL DEAD OR DISEASED TREES SHALL BE REMOVED FROM THE SITE. TREES & SHRUBS TO BE SAVED ARE TO BE FLAGGED PRIOR TO CONSTRUCTION. NO STUMPS OR BRUSH TO BE BURIED ON SITE, USE APPROVED DISPOSAL FACILITIES. THE LIMIT OF CLEARING ON ALL LOTS SHALL BE CLEARLY STAKED PRIOR TO TREE CUTTING.
2. ALL PROPOSED UTILITIES WITHIN THE SUBDIVISION LIMITS SHALL BE LOCATED UNDERGROUND. THE HORIZONTAL AND VERTICAL ALIGNMENT OF SUCH UTILITIES SHALL BE DETERMINED BY THE APPROPRIATE UTILITY COMPANY.
3. THE UNDERGROUND UTILITIES SHOWN ON THIS PLAN HAVE BEEN OBTAINED FROM AVAILABLE RECORDS AND HAVE BEEN LOCATED IN THE FIELD WHERE POSSIBLE. THE ACTUAL LOCATION OF THESE UTILITIES SHOULD BE VERIFIED BY THE CONTRACTOR - CALL BEFORE YOU DIG 811.
4. ALL LOTS WITH DRAINAGE SWALES ARE SUBJECT TO DRAINAGE RIGHTS TO AND FROM EACH ABUTTING LOT.
5. NO PORTION OF ANY PROPOSED DRIVEWAY SHALL BE WITHIN 5' OF ANY CATCH BASIN.
6. PROPOSED MANHOLES SHALL HAVE PAVEMENT RAMPED OR BE SET FLUSH WITH THE BINDER COURSE OF PAVEMENT. ALL RAMPING TO BE DONE IN ACCORDANCE WITH TOWN SPECIFICATIONS AND AS DIRECTED BY THE TOWN ENGINEER, NO LATER THAN OCTOBER 30.
7. ALL WORK IN EXISTING TOWN RIGHTS OF WAY WILL REQUIRE STREET PERMITS ISSUED BY THE ENGINEERING DEPARTMENT.
8. THE CONTRACTOR SHALL VERIFY ALL DIMENSIONS PRIOR TO CONSTRUCTION AND ANY DISCREPANCIES SHALL BE REPORTED TO THE DESIGN ENGINEER AND TOWN ENGINEER BEFORE PROCEEDING.
9. GRADES SHALL BE INVESTIGATED FOR CONFLICTS AT UTILITY CROSSING, SUCH CONFLICTS SHALL BE DIRECTED TO THE DESIGN & TOWN ENGINEER FOR RESOLUTION.
10. ALL TREES, BRUSH, STUMPS, EXISTING STRUCTURES AND DEBRIS TO BE REMOVED DURING CONSTRUCTION TO BE REMOVED FROM THE SITE AND DISPOSED OF IN A SUITABLE MANNER. DEAD OR DYING TREES TO BE REMOVED AS THEY MAY POSE A SAFETY HAZARD. ALL UNSUITABLE MATERIALS DISCOVERED DURING CONSTRUCTION SHALL BE DISPOSED IN A SUITABLE MANNER.
11. NO EARTH SLOPES SHALL EXCEED 3:1. ANY RETAINING WALL THAT MAY BE REQUIRED SHALL BE DESIGNED BY A LICENSED STRUCTURAL ENGINEER AND SHALL PROVIDE PROPER TOP PROTECTION.
12. HOUSES, DRIVES, AND FLOOR ELEVATIONS SHOWN ARE SCHEMATIC AND MAY CHANGE ACCORDING TO TYPE AND LAYOUT OF HOUSE.
13. NO OVERNIGHT OPEN TRENCHES WILL BE PERMITTED ON EXISTING TOWN ROADWAYS.
14. NOTIFY THE TOWN ENGINEER PRIOR TO THE CONSTRUCTION TO ARRANGE A PRE-CONSTRUCTION MEETING.
15. ALL DISTURBED AREAS NOT PAVED OR MULCHED, SHALL BE LOAMED WITH 4" MINIMUM OF TOPSOIL, FERTILIZED AND SEEDED.
16. ROOF, CELLAR, FOUNDATION AND/OR CURTAIN DRAINS MAY BE CONNECTED
17. THE DEVELOPER WILL BE RESPONSIBLE FOR THE INSTALLATION OF STREET LIGHTS AND THEIR ASSOCIATED COSTS.
18. CATCH BASINS FRAMES SHALL MATCH ABUTTING CURB TYPES. ALL CATCH BASINS TO HAVE GALVANIZED FRAMES AND GRATES.
19. MINIMUM COVER ON STORM DRAINAGE TO BE 2.0 FEET FOR HDPE PIPE OR 12" FOR R.C.P. -CLASS V
20. ALL CONSTRUCTION TO BE DONE IN ACCORDANCE WITH THE TOWN SPECIFICATION.
21. FIRE HYDRANTS TO BE INSTALLED 2' BEHIND CURB WITH GROUND CLEARANCE OF 18" TO PUMP CONNECTION LOCATION.
22. DRIVEWAY LIPS AND PAVED APRONS SHALL BE INSTALLED ON ALL LOTS.
23. SHOULD INDIVIDUAL LOTS BE SOLD, THE DEVELOPER SHOULD INSURE THAT ANY CONDITIONS IMPOSED ON ANY LOT BE CLEARLY NOTED IN THE CONTRACT FOR SALE. IT WILL BE THE TOWN'S POSITION THAT ALL IMPROVEMENTS WILL BE THE RESPONSIBILITY OF THE DEVELOPER. IF THE DEVELOPER ASSIGNS ANY OF THESE REQUIREMENTS TO THE BUYER, THEY SHOULD BE CLEARLY NOTED.
24. ALL HOMES TO BE CONSTRUCTED ARE TO HAVE NUMBERS, AS PER TOWN ORDINANCE AND MUST BE VISIBLE FROM THE STREET.
25. THERE ARE TO BE STREET TREES PLANTED AS PER SECTION 4-07 OF THE SOUTHINGTON SUBDIVISION REGULATIONS. STREET TREE LOCATIONS SHOWN ON THIS MAP ARE APPROXIMATE. PROPOSED STREET TREE SPECIES SHOWN ARE FROM SUGGESTED SPECIES LIST (SECTION 4-07) AND DEVELOPER MAY SUBSTITUTE OTHER SPECIES FROM THE APPROVED LIST AS NECESSARY.
26. UNDERDRAINS IN THE ROAD TO BE REQUIRED BY THE DIRECTOR OF PUBLIC WORKS OR TOWN ENGINEER AS NEEDED.
27. ALL PROPOSED SWALES TO BE CONSTRUCTED IN CONJUNCTION WITH THE DRAINAGE SYSTEM.
28. STREET SIGN TO BE INSTALLED AND REMAIN VISIBLE DURING ALL STAGES OF CONSTRUCTION. TEMPORARY STREET SIGNS ARE TO BE ERECTED PRIOR TO WORK COMMENCEMENT.
29. WATER AND GAS GRATES TO BE SET TO BINDER COURSE; ADJUST WITH RINGS TO FINAL FINISH PAVEMENT GRADES.
30. NO STUMPS OR BRUSH TO BE BURIED ON SITE, USE APPROVED DISPOSAL FACILITIES.
31. ALL TRENCHES INCLUDING SANITARY SEWERS TO BE BACK FILLED WITH GRAVEL.
32. WATER MAINS TO BE TESTED TO 150 PSI, CHLORINATION BY INJECTION METHOD AND DECHLORINATION ARE THE RESPONSIBILITY OF THE CONTRACTOR TO BE COORDINATED WITH THE MDC.
33. SEWER TO BE INSTALLED INCLUDING LATERALS TO STREET LINES AND AIR TESTED AND VIDEO TAPED PRIOR TO ACCEPTANCE.

LEGEND

- EXISTING PROPERTY LINE
- IRON PIN OR IRON PIPE FOUND (I.P. FND.)
- EXISTING TREE LINE
- EXISTING CONTOUR (136)
- EXISTING SPOT GRADE (412.09)
- EXISTING UTILITY POLE (POLE #)
- EXISTING BIT. CURB
- EXISTING STORM DRAINAGE SYSTEM (C.B. PIPE (SIZE, TYPE))
- EXISTING WATER MAIN
- EXISTING SANITARY SEWER (M.H. PIPE (SIZE, TYPE))
- LIMITS OF FLAGGED WETLANDS (FLAG #)
- PROPOSED BIT. CURB
- PROPOSED STORM DRAINAGE SYSTEM
- PROPOSED WATER MAIN
- PROPOSED SANITARY SEWER
- PROPOSED ELEC. SERVICE
- PROPOSED CONTOUR (136)
- PROPOSED SPOT GRADE (136.0)
- PROPOSED TREE LINE
- PROPOSED STREET TREE

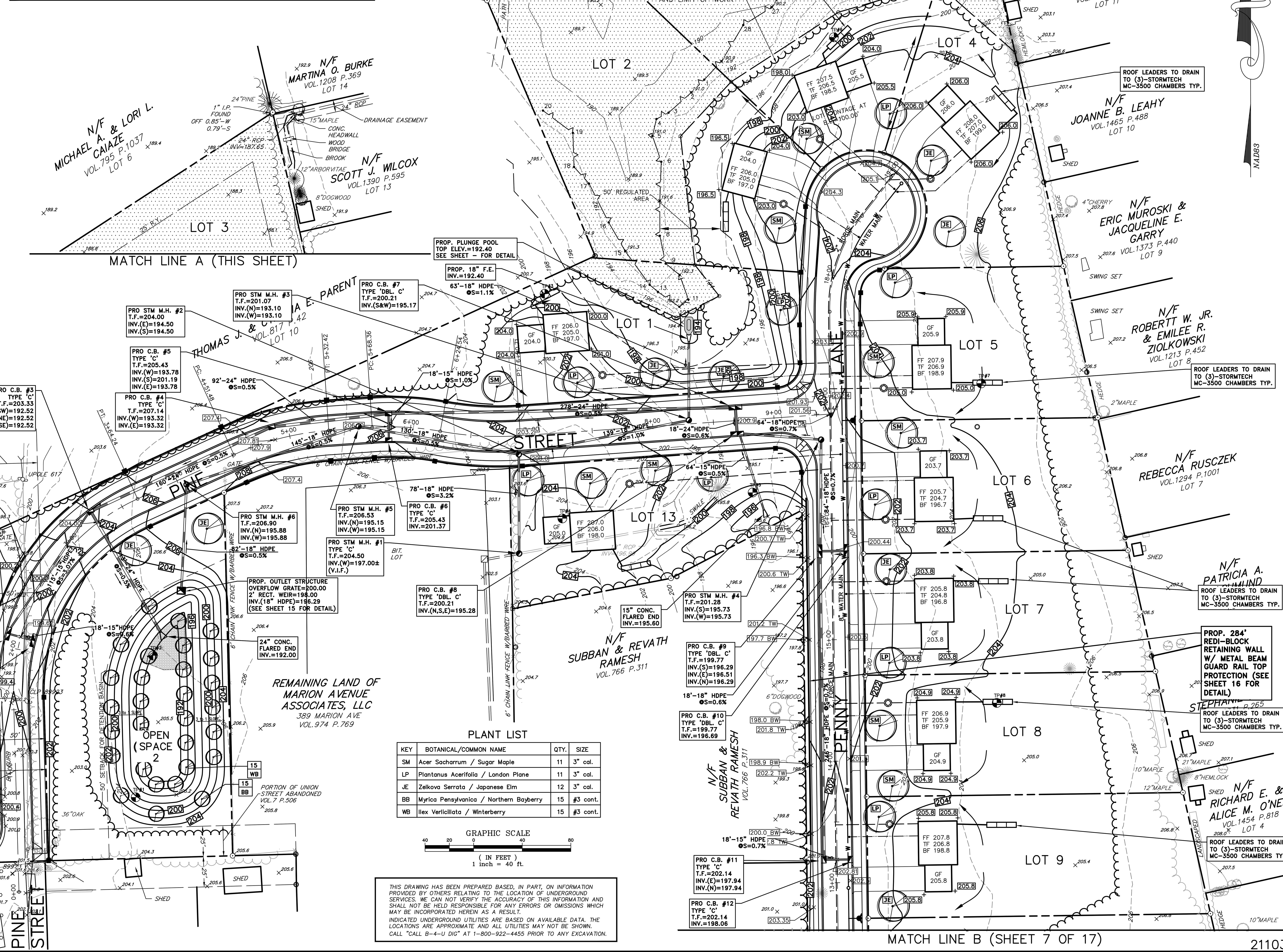

PLANT LIST

KEY	BOTANICAL/COMMON NAME	QTY.	SIZE
SM	Acer Sacharrum / Sugar Maple	11	3" cal.
LP	Plantanus Acerifolia / London Plane	11	3" cal.
JE	Zelkova Serrata / Japanese Elm	12	3" cal.
BB	Myrica Pensylvanica / Northern Bayberry	15	#3 cont.
WB	Ilex Verlicillata / Winterberry	15	#3 cont.

GRAPHIC SCALE

40 20 0 40 80

(IN FEET)
1 inch = 40 ft.

THIS DRAWING HAS BEEN PREPARED BASED, IN PART, ON INFORMATION PROVIDED BY OTHERS RELATING TO THE LOCATION OF UNDERGROUND SERVICES. WE CAN NOT VERIFY THE ACCURACY OF THIS INFORMATION AND SHALL NOT BE HELD RESPONSIBLE FOR ANY ERRORS OR OMISSIONS WHICH MAY BE INCORPORATED HEREIN AS A RESULT.

INDICATED UNDERGROUND UTILITIES ARE BASED ON AVAILABLE DATA. THE LOCATIONS ARE APPROXIMATE AND ALL UTILITIES MAY NOT BE SHOWN.

CALL "CALL B-4-U DIG" AT 1-800-922-4455 PRIOR TO ANY EXCAVATION.

21103

HALLISEY, PEARSON & CASSIDY
CIVIL ENGINEERS & LAND SURVEYORS
630 MAIN STREET, UNIT #1A
CROMWELL, CONNECTICUT 06416
PHONE: (860)-529-6812, FAX: (860)-721-7709

THE BONGIOVANNI GROUP, INC.
LAND SURVEYORS
170 Pane Road
Newington, Conn. 06111
TEL. (860) 666-0134
FAX (860) 666-3830

Scale: 1"=40'
Checked: AB
Date: 6-27-22
Drawn: BTM

Revision	Date
GENERAL REVISIONS	3-3-23

PENNY LANE SUBDIVISION
PREPARED FOR
LEPAGE HOMES, INC.
347, 349 & 389 MARION AVENUE
SOUTHINGTON, CONNECTICUT

GRADING PLAN

S:\SDSKPROJ\2021_jobs\21103\dwg\21103-Subdiv 121322.dwg

SITE DEVELOPMENT NOTES:

1. EXISTING TREES AND SHRUBS SHALL BE PRESERVED WHEREVER PRACTICAL AND/OR DESIRABLE. ALL DEAD OR DISEASED TREES SHALL BE REMOVED FROM THE SITE. TREES & SHRUBS TO BE SAVED ARE TO BE FLAGGED PRIOR TO CONSTRUCTION. NO STUMPS OR BRUSH TO BE BURIED ON SITE, USE APPROVED DISPOSAL FACILITIES. THE LIMIT OF CLEARING ON ALL LOTS SHALL BE CLEARLY STAKED PRIOR TO TREE CUTTING.
2. ALL PROPOSED UTILITIES WITHIN THE SUBDIVISION LIMITS SHALL BE LOCATED UNDERGROUND. THE HORIZONTAL AND VERTICAL ALIGNMENT OF SUCH UTILITIES SHALL BE DETERMINED BY THE APPROPRIATE UTILITY COMPANY.
3. THE UNDERGROUND UTILITIES SHOWN ON THIS PLAN HAVE BEEN OBTAINED FROM AVAILABLE RECORDS AND HAVE BEEN LOCATED IN THE FIELD WHERE POSSIBLE. THE ACTUAL LOCATION OF THESE UTILITIES SHOULD BE VERIFIED BY THE CONTRACTOR - CALL BEFORE YOU DIG 811.
4. ALL LOTS WITH DRAINAGE SWALES ARE SUBJECT TO DRAINAGE RIGHTS TO AND FROM EACH ABUTTING LOT.
5. NO PORTION OF ANY PROPOSED DRIVEWAY SHALL BE WITHIN 5' OF ANY CATCH BASIN.
6. PROPOSED MANHOLES SHALL HAVE PAVEMENT RAMPED OR BE SET FLUSH WITH THE BINDER COURSE OF PAVEMENT. ALL RAMPING TO BE DONE IN ACCORDANCE WITH TOWN SPECIFICATIONS AND AS DIRECTED BY THE TOWN ENGINEER, NO LATER THAN OCTOBER 30.
7. ALL WORK IN EXISTING TOWN RIGHTS OF WAY WILL REQUIRE STREET PERMITS ISSUED BY THE ENGINEERING DEPARTMENT.
8. THE CONTRACTOR SHALL VERIFY ALL DIMENSIONS PRIOR TO CONSTRUCTION AND ANY DISCREPANCIES SHALL BE REPORTED TO THE DESIGN ENGINEER AND TOWN ENGINEER BEFORE PROCEEDING.
9. GRADES SHALL BE INVESTIGATED FOR CONFLICTS AT UTILITY CROSSING, SUCH CONFLICTS SHALL BE DIRECTED TO THE DESIGN & TOWN ENGINEER FOR RESOLUTION.
10. ALL TREES, BRUSH, STUMPS, EXISTING STRUCTURES AND DEBRIS TO BE REMOVED DURING CONSTRUCTION TO BE REMOVED FROM THE SITE AND DISPOSED OF IN A SUITABLE MANNER. DEAD OR DYING TREES TO BE REMOVED AS THEY MAY POSE A SAFETY HAZARD. ALL UNSUITABLE MATERIALS DISCOVERED DURING CONSTRUCTION SHALL BE DISPOSED IN A SUITABLE MANNER.
11. NO EARTH SLOPES SHALL EXCEED 3:1. ANY RETAINING WALL THAT MAY BE REQUIRED SHALL BE DESIGNED BY A LICENSED STRUCTURAL ENGINEER AND SHALL PROVIDE PROPER TOP PROTECTION.
12. HOUSES, DRIVES, AND FLOOR ELEVATIONS SHOWN ARE SCHEMATIC AND MAY CHANGE ACCORDING TO TYPE AND LAYOUT OF HOUSE.
13. NO OVERNIGHT OPEN TRENCHES WILL BE PERMITTED ON EXISTING TOWN ROADWAYS.
14. NOTIFY THE TOWN ENGINEER PRIOR TO THE CONSTRUCTION TO ARRANGE A PRE-CONSTRUCTION MEETING.
15. ALL DISTURBED AREAS NOT PAVED OR MULCHED, SHALL BE LOAMED WITH 4" MINIMUM OF TOPSOIL, FERTILIZED AND SEEDED.
16. ROOF, CELLAR, FOUNDATION AND/OR CURTAIN DRAINS MAY BE CONNECTED
17. THE DEVELOPER WILL BE RESPONSIBLE FOR THE INSTALLATION OF STREET LIGHTS AND THEIR ASSOCIATED COSTS.
18. CATCH BASINS FRAMES SHALL MATCH ABUTTING CURB TYPES. ALL CATCH BASINS TO HAVE GALVANIZED FRAMES AND GRATES.
19. MINIMUM COVER ON STORM DRAINAGE TO BE 2.0 FEET FOR HDPE PIPE OR 12" FOR R.C.P. -CLASS V
20. ALL CONSTRUCTION TO BE DONE IN ACCORDANCE WITH THE TOWN SPECIFICATION.
21. FIRE HYDRANTS TO BE INSTALLED 2' BEHIND CURB WITH GROUND CLEARANCE OF 18" TO PUMP CONNECTION LOCATION.
22. DRIVEWAY LIPS AND PAVED APRONS SHALL BE INSTALLED ON ALL LOTS.
23. SHOULD INDIVIDUAL LOTS BE SOLD, THE DEVELOPER SHOULD INSURE THAT ANY CONDITIONS IMPOSED ON ANY LOT BE CLEARLY NOTED IN THE CONTRACT FOR SALE. IT WILL BE THE TOWN'S POSITION THAT ALL IMPROVEMENTS WILL BE THE RESPONSIBILITY OF THE DEVELOPER. IF THE DEVELOPER ASSIGNS ANY OF THESE REQUIREMENTS TO THE BUYER, THEY SHOULD BE CLEARLY NOTED.
24. ALL HOMES TO BE CONSTRUCTED ARE TO HAVE NUMBERS, AS PER TOWN ORDINANCE AND MUST BE VISIBLE FROM THE STREET.
25. THERE ARE TO BE STREET TREES PLANTED AS PER SECTION 4-07 OF THE SOUTHINGTON SUBDIVISION REGULATIONS. STREET TREE LOCATIONS SHOWN ON THIS MAP ARE APPROXIMATE. PROPOSED STREET TREE SPECIES SHOWN ARE FROM SUGGESTED SPECIES LIST (SECTION 4-07) AND DEVELOPER MAY SUBSTITUTE OTHER SPECIES FROM THE APPROVED LIST AS NECESSARY.
26. UNDERDRAINS IN THE ROAD TO BE REQUIRED BY THE DIRECTOR OF PUBLIC WORKS OR TOWN ENGINEER AS NEEDED.
27. ALL PROPOSED SWALES TO BE CONSTRUCTED IN CONJUNCTION WITH THE DRAINAGE SYSTEM.
28. STREET SIGN TO BE INSTALLED AND REMAIN VISIBLE DURING ALL STAGES OF CONSTRUCTION. TEMPORARY STREET SIGNS ARE TO BE ERECTED PRIOR TO WORK COMMENCEMENT.
29. WATER AND GAS GRATES TO BE SET TO BINDER COURSE; ADJUST WITH RINGS TO FINAL FINISH PAVEMENT GRADES.
30. NO STUMPS OR BRUSH TO BE BURIED ON SITE, USE APPROVED DISPOSAL FACILITIES.
31. ALL TRENCHES INCLUDING SANITARY SEWERS TO BE BACK FILLED WITH GRAVEL.
32. WATER MAINS TO BE TESTED TO 150 PSI, CHLORINATION BY INJECTION METHOD AND DECHLORINATION ARE THE RESPONSIBILITY OF THE CONTRACTOR TO BE COORDINATED WITH THE MDC.
33. SEWER TO BE INSTALLED INCLUDING LATERALS TO STREET LINES AND AIR TESTED AND VIDEO TAPED PRIOR TO ACCEPTANCE.

LEGEND

- EXISTING PROPERTY LINE
- I.P. FND. OR IRON PIN OR IRON PIPE FOUND
- EXISTING TREE LINE
- 136 EXISTING CONTOUR
- 412.09 EXISTING SPOT GRADE
- POLE # EXISTING UTILITY POLE
- C.B. PIPE (SIZE, TYPE) EXISTING BIT. CURB
- EXISTING STORM DRAINAGE SYSTEM
- W EXISTING WATER MAIN
- M.H. PIPE (SIZE, TYPE) S EXISTING SANITARY SEWER
- FLAG # LIMITS OF FLAGGED WETLANDS
- C.B. PIPE (SIZE, TYPE) PROPOSED BIT. CURB
- PROPOSED STORM DRAINAGE SYSTEM
- W PROPOSED WATER MAIN
- M.H. PIPE (SIZE, TYPE) S PROPOSED SANITARY SEWER
- E PROPOSED ELEC. SERVICE
- 136 PROPOSED CONTOUR
- 136.0 PROPOSED SPOT GRADE
- PROPOSED TREE LINE
- PROPOSED STREET TREE

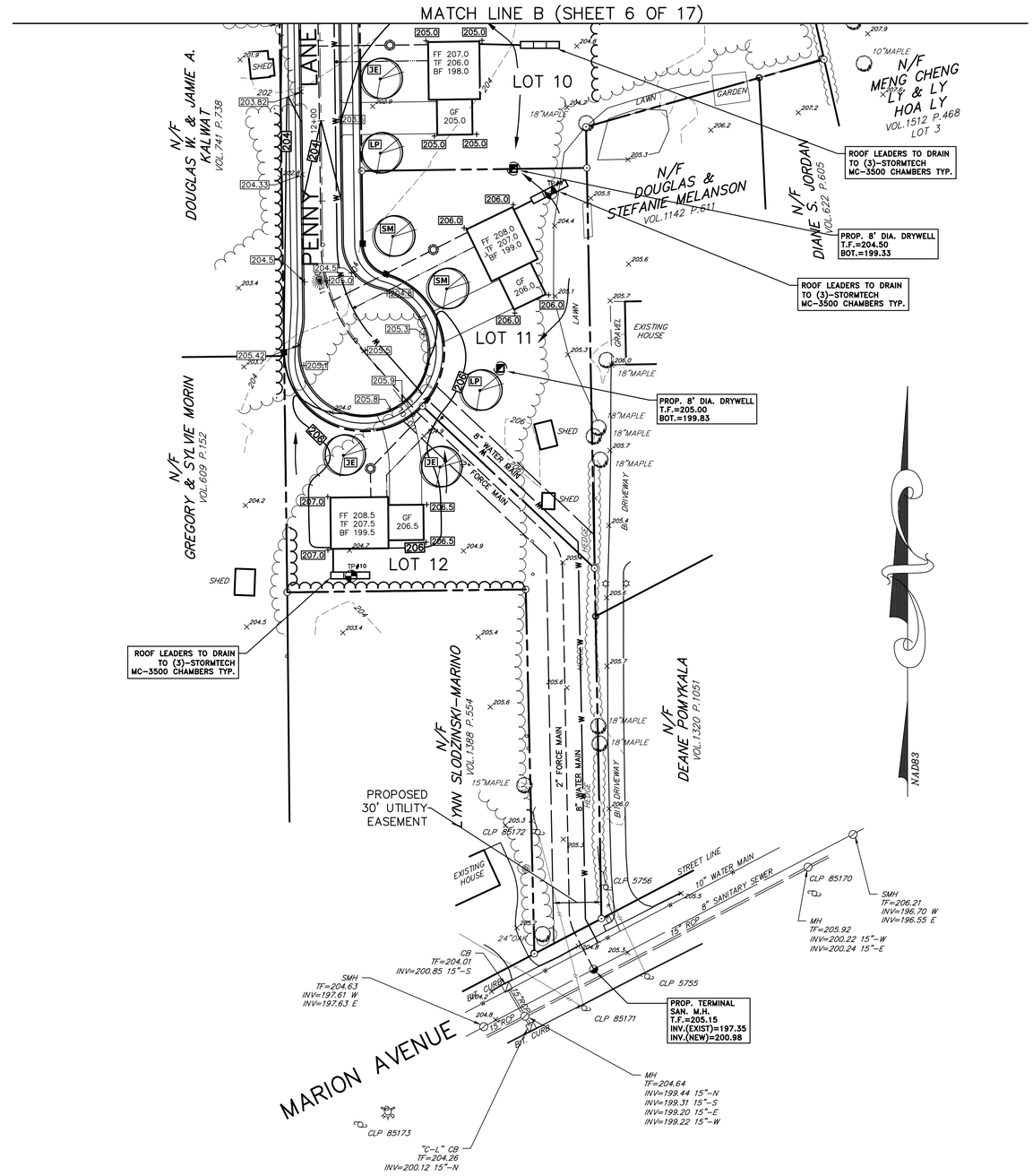

INTERSECTION GRADING PLAN 1"=20'

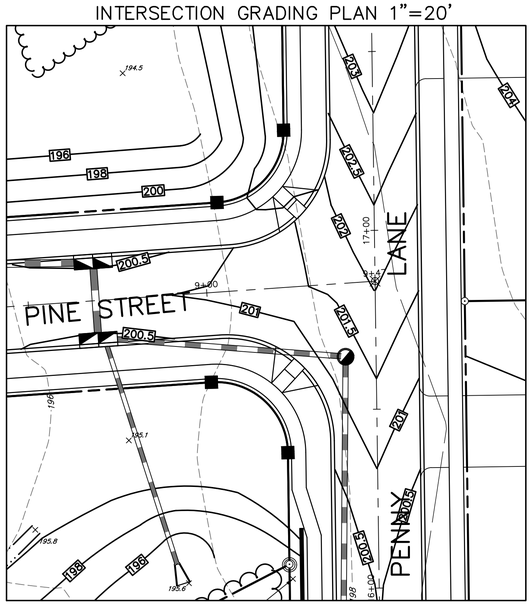

PLANT LIST

KEY	BOTANICAL/COMMON NAME	QTY.	SIZE
SM	Acer Sacharrum / Sugar Maple	11	3" cal.
LP	Plantanus Acerifolia / London Plane	11	3" cal.
JE	Zelkova Serrata / Japanese Elm	12	3" cal.
BB	Myrica Pensylvanica / Northern Bayberry	15	#3 cont.
WB	Ilex Verticillata / Winterberry	15	#3 cont.

GRAPHIC SCALE
40 20 0 40 80
(IN FEET)
1 inch = 40 ft.

THIS DRAWING HAS BEEN PREPARED BASED, IN PART, ON INFORMATION PROVIDED BY OTHERS RELATING TO THE LOCATION OF UNDERGROUND SERVICES. WE CAN NOT VERIFY THE ACCURACY OF THIS INFORMATION AND SHALL NOT BE HELD RESPONSIBLE FOR ANY ERRORS OR OMISSIONS WHICH MAY BE INCORPORATED HEREIN AS A RESULT.
INDICATED UNDERGROUND UTILITIES ARE BASED ON AVAILABLE DATA. THE LOCATIONS ARE APPROXIMATE AND ALL UTILITIES MAY NOT BE SHOWN. CALL "CALL B-4-U DIG" AT 1-800-922-4455 PRIOR TO ANY EXCAVATION.

21103

HALLISEY, PEARSON & CASSIDY
CIVIL ENGINEERS & LAND SURVEYORS
830 MAIN STREET, UNIT #416
CROMWELL, CONNECTICUT 06416
PHONE: (860)-529-6812, FAX: (860)-721-7709

THE BOND/HANK GROUP, INC.
LAND SURVEYORS
170 Pane Road
Newington, Conn. 06111
TEL. (860) 666-0134
FAX (860) 666-3830

Scale: 1"=40'
Checked: AB
Date: 6-27-22
Drawn: BTM

Revision	Date
GENERAL REVISIONS	3-3-23

PENNY LANE SUBDIVISION
PREPARED FOR
LEPAGE HOMES, INC.
347, 349 & 389 MARION AVENUE
SOUTHINGTON, CONNECTICUT

GRADING PLAN

Sheet 7 of 17

S:\SDSKPROJ\2021_Jobs\21103\Dwg\21103-Subdiv-121322.dwg

LEGEND

- EXISTING PROPERTY LINE
- L.P. FND. — IRON PIN OR IRON PIPE FOUND
- EXISTING TREE LINE
- 136 — EXISTING CONTOUR
- EXISTING SPOT GRADE
- POLE # — EXISTING UTILITY POLE
- C.B. PIPE (SIZE, TYPE) — EXISTING BIT. CURB
- EXISTING STORM DRAINAGE SYSTEM
- EXISTING WATER MAIN
- M.H. PIPE (SIZE, TYPE) — EXISTING SANITARY SEWER
- WL FLAG — LIMITS OF FLAGGED WETLANDS
- PROPOSED BIT. CURB
- C.B. PIPE (SIZE, TYPE) — PROPOSED STORM DRAINAGE SYSTEM
- PROPOSED WATER MAIN
- M.H. PIPE (SIZE, TYPE) — PROPOSED SANITARY SEWER
- PROPOSED GAS SERVICE
- PROPOSED ELEC. SERVICE
- 136 — PROPOSED CONTOUR
- 136.0 — PROPOSED SPOT GRADE
- PROPOSED TREE LINE

EROSION / SEDIMENT CONTROL LEGEND

- GSF — SEDIMENT FILTER FENCE
- SB — ROW OF STRAW BALES
- CE — CONSTRUCTION ENTRANCE
- STK — TEMPORARY SOIL STOCKPILE — SURROUNDED BY SEDIMENT FILTER FENCE
- IP — INLET PROTECTION (ALL CATCH BASINS AND YARD DRAINS). INSTALL FILTER FABRIC ENVELOPES IN ALL CATCH BASIN GRATES
- TST — TEMPORARY SEDIMENT TRAP

SEDIMENT & EROSION CONTROL NOTES:

1. THE EROSION AND SEDIMENT CONTROL MEASURES SHOWN SHALL BE CONSIDERED AS MINIMUM REQUIREMENTS. ADDITIONAL MEASURES MAY BE REQUIRED AT THE DIRECTION OF THE TOWN ENGINEER. ZONING ENFORCEMENT STAFF MAY MODIFY THE EROSION/SEDIMENTATION CONTROL PLAN AS SITE CONDITIONS WARRANT.
2. ALL EROSION AND SEDIMENT CONTROL MEASURES SHALL BE INSTALLED AND MAINTAINED IN ACCORDANCE WITH THE "GUIDELINES FOR SOIL EROSION AND SEDIMENT CONTROL - CONNECTICUT - 2002" AVAILABLE FROM CONN. DEP.
3. THE TOWN OF SOUTHINGTON RESERVES THE RIGHT TO REVISE THE EROSION CONTROL PLANS AS CONDITIONS MAY WARRANT.
4. ALL AREAS THAT ARE TO BE DISTURBED SHALL BE KEPT TO A MINIMUM. AREAS NOT TO BE PAVED SHALL BE LOAMED, LIMED, FERTILIZED, AND SEEDED AS SOON AS PRACTICAL. IF PERMANENT PLANTING IS NOT PRACTICAL AT THAT TIME, THE AREA SHALL BE MULCH STABILIZED UNTIL SUCH SEEDING CAN BE DONE. SLOPES STEEPER THAN 3:1 SHALL BE FURTHER STABILIZED USING SECURED JUTE, STRAW, OR COCONUT MATTING.
5. THE DEVELOPER SHALL BE RESPONSIBLE FOR THE INSPECTION AND MAINTENANCE OF ALL SEDIMENT CONTROL DEVICES. EXCESS SEDIMENT SHALL BE REDISTRIBUTED ON THE SITE.
6. AREAS SUBJECT TO VEHICULAR TRAFFIC SHALL BE STABILIZED AGAINST WIND EROSION BY APPLYING CALCIUM CHLORIDE AND/OR WATER TO THE SURFACE AS REQUIRED.
7. THE ANTI-TRACKING RAMPS SHALL BE INSTALLED PRIOR TO ROUGH GRADING.
8. TOPSOIL SHALL BE STOCKPILED IN COMPACT AREAS. THE PILE(S) SHALL BE STABILIZED USING A TEMPORARY VEGETATIVE COVER OR WITH JUTE MATTING. A CONTINUOUS STAKED SILT FENCE SHALL BE INSTALLED AROUND THE BASE PERIMETER(S).
9. ALL EXISTING VEGETATIVE COVER NOT REQUIRED TO BE REMOVED FOR CONSTRUCTION SHALL REMAIN UNDISTURBED.
10. PERMANENT VEGETATIVE COVER SHALL CONFORM TO SEEDING SCHEDULES GIVEN IN FIG. 6-2 & 6-3 AND TEMPORARY VEGETATIVE COVER SHALL CONFORM TO FIG. 6-1 FOUND IN THE "GUIDELINES FOR EROSION AND SEDIMENT CONTROL 1985."
11. ALL SEDIMENT CONTROL DEVICES AND/OR MEASURES SHALL BE APPROVED BY THE TOWN PLANNING & ZONING COMMISSION AND/OR THE INLAND WETLAND AND WATERCOURSES AGENCY.
12. CATCH BASINS WILL BE PROTECTED WITH STRAW BALE FILTERS THROUGHOUT THE CONSTRUCTION PERIOD AND UNTIL ALL DISTURBED AREAS ARE THOROUGHLY STABILIZED.
13. ALL EROSION/SEDIMENTATION CONTROLS ARE TO BE INSPECTED AND APPROVED PRIOR TO CONSTRUCTION.
14. SEDIMENT REMOVED FROM CONTROL STRUCTURES WILL BE DISPOSED OF IN AN APPROVED NON-WETLAND & NON-FLOOD PLAIN AREAS.
15. THE PARTY RESPONSIBLE FOR THE EROSION AND SEDIMENT CONTROL MEASURES ON THESE PLANS IS: BILL LEPAGE, TEL. 860-621-3262.
16. EXISTING STRUCTURES AND DEBRIS TO BE REMOVED FROM THE SITE AND DISPOSED OF IN A SUITABLE MANNER.

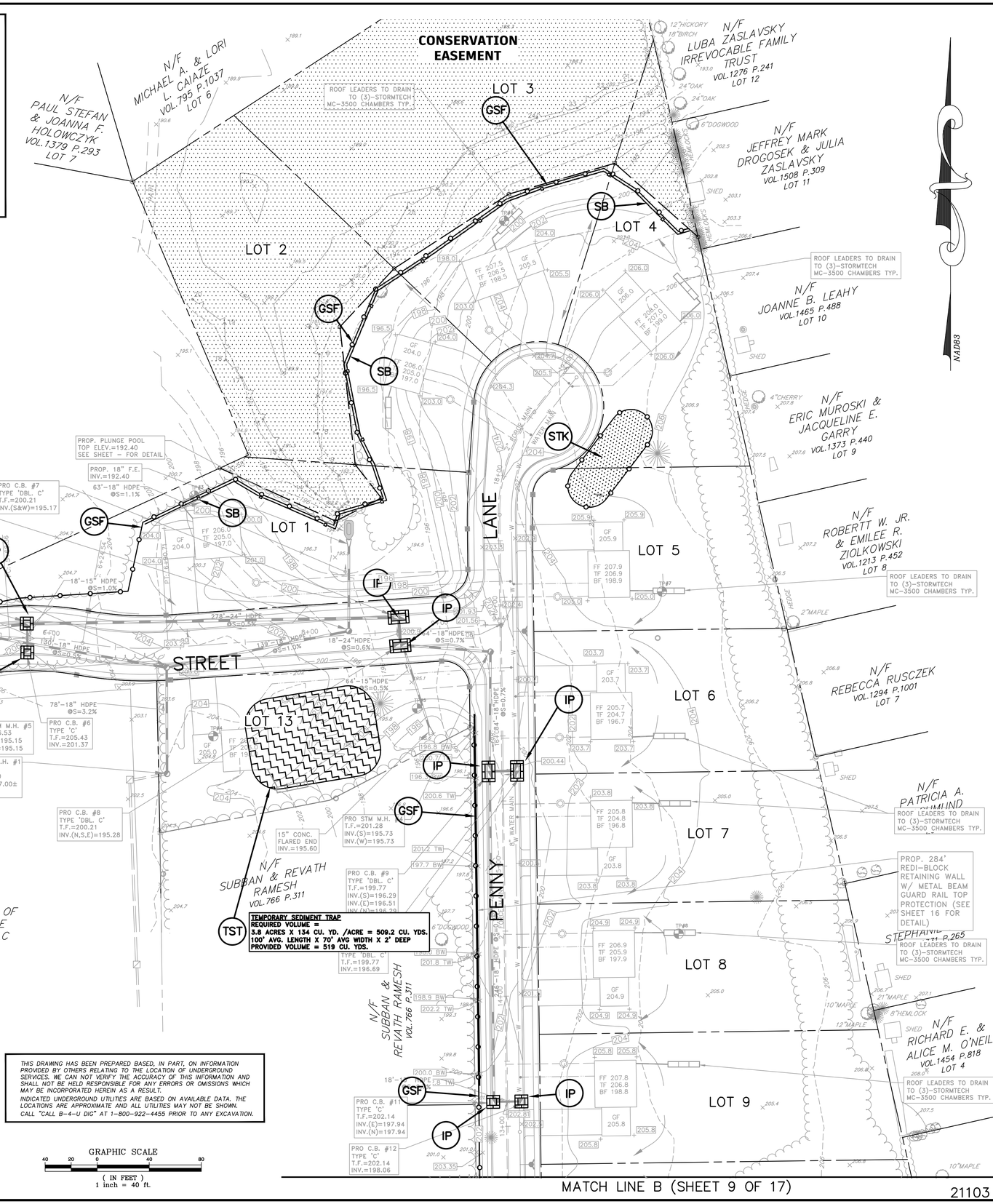

THIS DRAWING HAS BEEN PREPARED BASED, IN PART, ON INFORMATION PROVIDED BY OTHERS RELATING TO THE LOCATION OF UNDERGROUND SERVICES. WE CAN NOT VERIFY THE ACCURACY OF THIS INFORMATION AND SHALL NOT BE HELD RESPONSIBLE FOR ANY ERRORS OR OMISSIONS WHICH MAY BE INCORPORATED HEREIN AS A RESULT.
INDICATED UNDERGROUND UTILITIES ARE BASED ON AVAILABLE DATA. THE LOCATIONS ARE APPROXIMATE AND ALL UTILITIES MAY NOT BE SHOWN. CALL "CALL B-4-U DIG" AT 1-800-922-4455 PRIOR TO ANY EXCAVATION.

GRAPHIC SCALE
40 20 0 40 80
(IN FEET)
1 inch = 40 ft.

MATCH LINE B (SHEET 9 OF 17)

21103

HALLISEY, PEARSON & CASSIDY
CIVIL ENGINEERS & LAND SURVEYORS
632 MAIN STREET, UNIT #1A
MANCHESTER, CONNECTICUT 06040
PHONE: (860)-529-6812; FAX: (860)-721-7709

THE BONGIOVANNI GROUP, INC.
LAND DEVELOPERS
170 Pane Road
Newington, Conn. 06111
TEL. (860) 666-0134
FAX (860) 666-3830

Scale: 1"=40'
Checked: AB
Date: 6-27-22
Drawn: BTM
Date: 3-3-23
Revision
GENERAL REVISIONS

PENNY LANE SUBDIVISION
PREPARED FOR
LEPAGE HOMES, INC.
347, 349 & 389 MARION AVENUE
SOUTHINGTON, CONNECTICUT

EROSION & SEDIMENT CONTROL PLAN

Sheet 8 of 17

S:\DSKPROJ\2021_jobs\21103\dwg\21103-Subdiv-121322.dwg

LEGEND

- EXISTING PROPERTY LINE
- I.P. FND. — IRON PIN OR IRON PIPE FOUND
- EXISTING TREE LINE
- 136 — EXISTING CONTOUR
- EXISTING SPOT GRADE
- POLE # — EXISTING UTILITY POLE
- C.B. PIPE (SIZE, TYPE) — EXISTING BIT. CURB
- EXISTING STORM DRAINAGE SYSTEM
- EXISTING WATER MAIN
- M.H. PIPE (SIZE, TYPE) — EXISTING SANITARY SEWER
- WL FLAG — LIMITS OF FLAGGED WETLANDS
- C.B. PIPE (SIZE, TYPE) — PROPOSED BIT. CURB
- PROPOSED STORM DRAINAGE SYSTEM
- PROPOSED WATER MAIN
- PROPOSED SANITARY SEWER
- PROPOSED GAS SERVICE
- PROPOSED ELEC. SERVICE
- 136 — PROPOSED CONTOUR
- L136.0 — PROPOSED SPOT GRADE
- PROPOSED TREE LINE

EROSION / SEDIMENT CONTROL LEGEND

- GSF — SEDIMENT FILTER FENCE
- SB — ROW OF STRAW BALES
- CE — CONSTRUCTION ENTRANCE
- STK — TEMPORARY SOIL STOCKPILE — SURROUNDED BY SEDIMENT FILTER FENCE
- IP — INLET PROTECTION (ALL CATCH BASINS AND YARD DRAINS). INSTALL FILTER FABRIC ENVELOPES IN ALL CATCH BASIN GRATES
- TST — TEMPORARY SEDIMENT TRAP

SEDIMENT & EROSION CONTROL NOTES:

1. THE EROSION AND SEDIMENT CONTROL MEASURES SHOWN SHALL BE CONSIDERED AS MINIMUM REQUIREMENTS. ADDITIONAL MEASURES MAY BE REQUIRED AT THE DIRECTION OF THE TOWN ENGINEER. ZONING ENFORCEMENT STAFF MAY MODIFY THE EROSION/SEDIMENTATION CONTROL PLAN AS SITE CONDITIONS WARRANT.
2. ALL EROSION AND SEDIMENT CONTROL MEASURES SHALL BE INSTALLED AND MAINTAINED IN ACCORDANCE WITH THE "GUIDELINES FOR SOIL EROSION AND SEDIMENT CONTROL - CONNECTICUT - 2002" AVAILABLE FROM CONN. DEP.
3. THE TOWN OF SOUTHINGTON RESERVES THE RIGHT TO REVISE THE EROSION CONTROL PLANS AS CONDITIONS MAY WARRANT.
4. ALL AREAS THAT ARE TO BE DISTURBED SHALL BE KEPT TO A MINIMUM. AREAS NOT TO BE PAVED SHALL BE LOAMED, LIMED, FERTILIZED, AND SEEDED AS SOON AS PRACTICAL. IF PERMANENT PLANTING IS NOT PRACTICAL AT THAT TIME, THE AREA SHALL BE MULCH STABILIZED UNTIL SUCH SEEDING CAN BE DONE. SLOPES STEEPER THAN 3:1 SHALL BE FURTHER STABILIZED USING SECURED JUTE, STRAW, OR COCONUT MATTING.
5. THE DEVELOPER SHALL BE RESPONSIBLE FOR THE INSPECTION AND MAINTENANCE OF ALL SEDIMENT CONTROL DEVICES. EXCESS SEDIMENT SHALL BE REDISTRIBUTED ON THE SITE.
6. AREAS SUBJECT TO VEHICULAR TRAFFIC SHALL BE STABILIZED AGAINST WIND EROSION BY APPLYING CALCIUM CHLORIDE AND/OR WATER TO THE SURFACE AS REQUIRED.
7. THE ANTI-TRACKING RAMPS SHALL BE INSTALLED PRIOR TO ROUGH GRADING.
8. TOPSOIL SHALL BE STOCKPILED IN COMPACT AREAS. THE PILE(S) SHALL BE STABILIZED USING A TEMPORARY VEGETATIVE COVER OR WITH JUTE MATTING. A CONTINUOUS STAKED SILT FENCE SHALL BE INSTALLED AROUND THE BASE PERIMETER(S).
9. ALL EXISTING VEGETATIVE COVER NOT REQUIRED TO BE REMOVED FOR CONSTRUCTION SHALL REMAIN UNDISTURBED.
10. PERMANENT VEGETATIVE COVER SHALL CONFORM TO SEEDING SCHEDULES GIVEN IN FIG. 6-2 & 6-3 AND TEMPORARY VEGETATIVE COVER SHALL CONFORM TO FIG. 6-1 FOUND IN THE "GUIDELINES FOR EROSION AND SEDIMENT CONTROL 1985."
11. ALL SEDIMENT CONTROL DEVICES AND/OR MEASURES SHALL BE APPROVED BY THE TOWN PLANNING & ZONING COMMISSION AND/OR THE INLAND WETLAND AND WATERCOURSES AGENCY.
12. CATCH BASINS WILL BE PROTECTED WITH STRAW BALE FILTERS THROUGHOUT THE CONSTRUCTION PERIOD AND UNTIL ALL DISTURBED AREAS ARE THOROUGHLY STABILIZED.
13. ALL EROSION/SEDIMENTATION CONTROLS ARE TO BE INSPECTED AND APPROVED PRIOR TO CONSTRUCTION.
14. SEDIMENT REMOVED FROM CONTROL STRUCTURES WILL BE DISPOSED OF IN AN APPROVED NON-WETLAND & NON-FLOOD PLAIN AREAS.
15. THE PARTY RESPONSIBLE FOR THE EROSION AND SEDIMENT CONTROL MEASURES ON THESE PLANS IS: BILL LEPAGE, TEL. 860-621-3262.
16. EXISTING STRUCTURES AND DEBRIS TO BE REMOVED FROM THE SITE AND DISPOSED OF IN A SUITABLE MANNER.

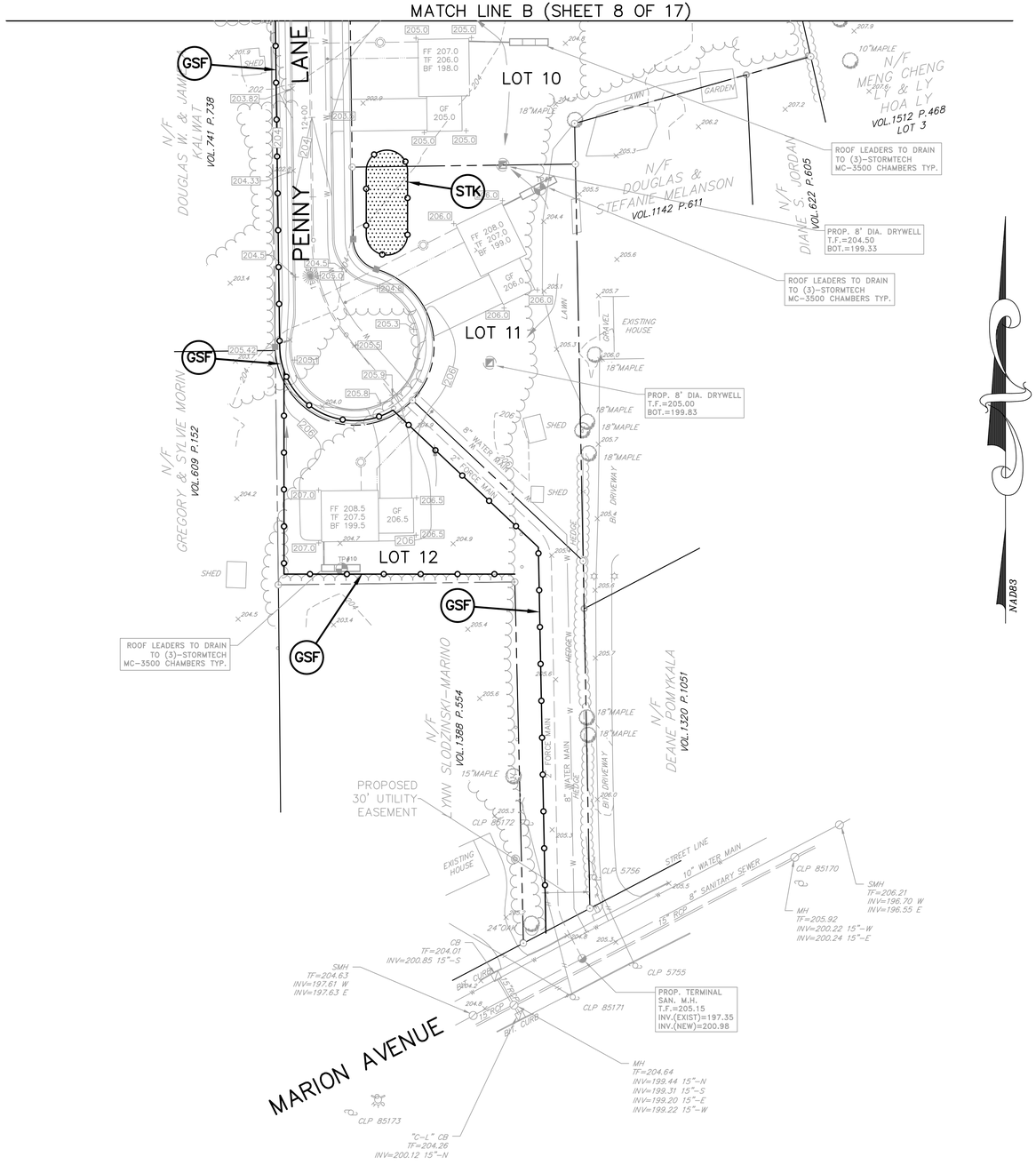

GRAPHIC SCALE
40 20 0 40 80
(IN FEET)
1 inch = 40 ft.

THIS DRAWING HAS BEEN PREPARED BASED, IN PART, ON INFORMATION PROVIDED BY OTHERS RELATING TO THE LOCATION OF UNDERGROUND SERVICES. WE CAN NOT VERIFY THE ACCURACY OF THIS INFORMATION AND SHALL NOT BE HELD RESPONSIBLE FOR ANY ERRORS OR OMISSIONS WHICH MAY BE INCORPORATED HEREIN AS A RESULT.
INDICATED UNDERGROUND UTILITIES ARE BASED ON AVAILABLE DATA. THE LOCATIONS ARE APPROXIMATE AND ALL UTILITIES MAY NOT BE SHOWN.
CALL "CALL B-4-U DIG" AT 1-800-922-4455 PRIOR TO ANY EXCAVATION.

HALLISEY, PEARSON & CASSIDY
CIVIL ENGINEERS & LAND SURVEYORS
630 MAIN STREET, UNIT #1A
MANCHESTER, CONNECTICUT 06040
PHONE: (860)-533-6812; FAX: (860)-721-7709

THE BONGIOVANNI GROUP, INC.
CIVIL & LAND SURVEYORS
170 Pane Road
Newington, Conn. 06111
TEL. (860) 666-0134
FAX (860) 666-3830

Date	Revision
3-3-23	GENERAL REVISIONS

Scale: 1"=40'
Checked: AB
Date: 6-27-22
Drawn: BTM

PENNY LANE SUBDIVISION
PREPARED FOR
LEPAGE HOMES, INC.
347, 349 & 389 MARION AVENUE
SOUTHINGTON, CONNECTICUT

EROSION & SEDIMENT CONTROL PLAN

Sheet 9 of 17

21103

S:\DSKPRO\2021_jobs\21103\dwg\21103-Subdiv-121322.dwg

PLAN VIEW

SCALE: 1"=40'

LEGEND

- PROPERTY LINE
- PROPOSED WATER LINE
- PROPOSED MANHOLE
- PROPOSED CATCH BASIN
- PROPOSED STORM SEWER PIPE
- PROPOSED GUARD RAIL
- PROPOSED FENCE
- PROPOSED LIGHT STANDARD
- PROPOSED HYDRANT

PRO STM M.H. #3
T.F.=201.07
INV.(N)=193.10
INV.(W)=193.10

PRO STM M.H. #2
T.F.=204.00
INV.(E)=194.50
INV.(S)=194.50

PRO C.B. #7
TYPE 'DBL. C'
T.F.=200.21
INV.(S&W)=195.17

PROP. PLUNGE POOL
TOP ELEV.=192.40
SEE SHEET - FOR DETAIL

PROP. 18" F.E.
INV.=192.40
63'-18" HDPE
@S=1.1%

PRO C.B. #5
TYPE 'C'
T.F.=205.43
INV.(W)=193.78
INV.(S)=193.78
INV.(E)=193.78

PRO C.B. #4
TYPE 'C'
T.F.=207.14
INV.(W)=193.32
INV.(E)=193.32

PRO C.B. #3
TYPE 'C'
T.F.=203.33
INV.(SW)=192.52
INV.(NE)=192.52
NV.(SE)=192.52

THOMAS J. & [illegible] E. PARENT
VOL.817 P.42
LOT 10

PROPOSED 4' CONCRETE WALK

PASSWAY RIGHTS AND RIGHTS TO INSTALL UTILITIES VOL.197 P.787, VOL.204 P.506

N/F KENNETH HARWOOD
VOL. 919 P.807

UPOLE 617

CLP 2125

92'-24" HDPE @S=0.5%

18'-15" HDPE @S=1.0%

PC: 4+51.58

PT: 5+32.42

PC: 5+68.36

PT: 6+84.24

PINE STREET

160'-24" HDPE @S=0.5%

145'-18" HDPE @S=0.5%

130'-18" HDPE @S=0.5%

278'-24" HDPE @S=0.5%

139'-18" HDPE @S=1.0%

18'-24"HDPE @S=0.6%

64'-18"HDPE @S=0.7%

64'-15"HDPE @S=0.5%

64'-18"HDPE @S=0.7%

78'-18" HDPE @S=3.2%

82'-18" HDPE @S=0.5%

115'-15"HDPE @3.07%

113'-24" HDPE @S=0.5%

18'-15"HDPE @S=0.6%

PRO STM M.H. #6
T.F.=206.90
INV.(N)=195.88
INV.(W)=195.88

PRO STM M.H. #5
T.F.=206.53
INV.(N)=195.15
INV.(W)=195.15

PRO STM M.H. #1
TYPE 'C'
T.F.=204.50
INV.(W)=197.00±
(V.I.F.)

PRO C.B. #6
TYPE 'C'
T.F.=205.43
INV.=201.37

PRO C.B. #8
TYPE 'DBL. C'
T.F.=200.21
INV.(N,S,E)=195.28

PROP. OUTLET STRUCTURE
OVERFLOW GRATE=200.00
2' RECT. WEIR=198.00
INV.(18" HDPE)=196.29
(SEE SHEET 15 FOR DETAIL)

24" CONC. FLARED END
INV.=192.00

REMAINING LAND OF
MARION AVENUE
ASSOCIATES, LLC
389 MARION AVE
VOL.974 P.769

OPEN SPACE 2
TO BE DEEDED TO
THE TOWN OF
SOUTHINGTON
38,814 S.F.
0.8910 AC.

PROPOSED 4' CONCRETE WALK

OPEN SPACE 1
TO BE DEEDED TO
THE TOWN OF
SOUTHINGTON
3,088 S.F.
0.0709 AC.

N/F
GCA PROPERTIES LLC
VOL.1035 P.835

CLP

PRO C.B. #2
TYPE 'DBL. C'
T.F.=198.95
INV.(SE)=196.15
INV.(NE)=196.05

PC: 1+59.60

CLP 89923

PRO C.B. #1
TYPE 'DBL. C'
T.F.=198.95
INV.=196.26

N/F
MICHAEL KIERAS
VOL.1290 P.876

NAD83

PASSWAY RIGHTS VOL.169 P.607
CL&P EASEMENT VOL.170 P.350

PROPOSED 2' WIDE DETECTABLE
WARNING STRIP (TYPICAL)

CLP 89923

UNION
STREET

PINE
STREET

PORTION OF UNION
STREET ABANDONED
VOL.7 P.506

SHED

SHED

LOT 1
33,432 S.F.
0.7675 AC.

GF 204.0
FF 206.0
TF 205.0
BF 197.0

LOT 13
22,517 S.F.
0.5169 AC.

GF 205.0
FF 207.0
TF 206.0
BF 198.0

PRO STM M.H. #4
T.F.=201.28
INV.(S)=195.73
INV.(W)=195.73

15" CONC.
FLARED END
INV.=195.60

N/F
SUBBAN & REVATH
RAMESH
VOL.766 P.311

PRO C.B. #9
TYPE 'DBL. C'
T.F.=199.77
INV.(S)=196.29
INV.(E)=196.51
INV.(N)=196.29

18'-18" HDPE
@S=0.6%

PRO C.B. #10
TYPE 'DBL. C'
T.F.=199.77
INV.=196.69

PENNY
LANE

PROPOSED 2' WIDE DETECTABLE
WARNING STRIP (TYPICAL)

PROPOSED
GRINDER PUMP
(TYPICAL)

GF 205.9
LOT 5
22,524 S.F.
0.5171 AC.
FF 207.9
TF 206.9
BF 198.9

INSTALL HYDRANT ASSEMBLY

GF 203.7
PENNY LANE, Sta=16+85.80
PINE STREET (2), Sta=9+47.13
LOT 6
22,573 S.F.
0.5182 AC.
FF 205.7
TF 204.7
BF 196.7

PROPOSED 4' CONCRETE WALK

LOT 7
22,844 S.F.
0.5244 AC.
FF 205.8
TF 204.8
BF 196.8
GF 203.8

1" COPPER (TYPE K)
WATER SERVICE
(TYPICAL)
ALL WATER SERVICES

8" X 1" TAP
(TYP.) ALL WATER SERVICES

8" W WATER MAIN

N/F
ROBERTT W. JR.
& EMILEE R.
ZIOLKOWSKI
VOL.1213 P.452
LOT 8

ROOF LEADERS TO DRAIN
TO (3)-STORMTECH
MC-3500 CHAMBERS TYP.

HEDGE

N/F
REBECCA RUSCZEK
VOL.1294 P.1001
LOT 7

SHED

N/F
PATRICIA A.
[illegible]

ROOF LEADERS TO DRAIN
TO (3)-STORMTECH
MC-3500 CHAMBERS TYP.

GRAPHIC SCALE
40 20 0 40 80
(IN FEET)
1 inch = 40 ft.

PROFILE

SCALE: HORIZ. 1"=40'
VERT. 1"=40'

PINE STREET

PVI STA: 2+46.07
PVI ELEV: 199.19
K: 14.29
LVC: 100.00
LOW PT. STA: 2+10.40
LOW PT ELEV: 199.62
BVCS: 1+96.07
BVCE: 199.69
EVCS: 2+96.07
EVCE: 202.19

PVI STA: 4+16.50
PVI ELEV: 209.41
K: 25.02
LVC: 200.00
HIGH PT. STA: 4+66.54
HIGH PT ELEV: 207.91
BVCS: 3+16.50
BVCE: 203.41
EVCS: 5+16.50
EVCE: 207.41

PVI STA: 8+61.64
PVI ELEV: 200.52
K: 25.39
LVC: 86.59
LOW PT. STA: 8+69.05
LOW PT ELEV: 200.88
BVCS: 8+18.35
BVCE: 201.39
EVCS: 9+04.94
EVCE: 201.13

GRADE BREAK STA = 0+25.00
ELEV = 201.40'

GRADE BREAK STA = 9+35.11
ELEV = 201.561

GRADE BREAK STA = 9+47.13
ELEV = 202.061

-1.00%
6.00%
-2.00%
1.41%
5.16%

PRO C.B. #2 TYPE 'DBL. C' T.F.= 198.95 INV.(SE)=196.15 INV.(NE)=196.05

PRO C.B. #1 TYPE 'DBL. C' T.F.= 198.95 INV.=196.26

PRO C.B. #3 TYPE 'C' T.F.=203.33 INV.(SW)=192.52 INV.(NE)=192.52 INV.(SE)=192.52

PRO STM M.H. #6 T.F.=206.90 INV.(N)=195.88 INV.(W)=195.88

PRO C.B. #4 TYPE 'C' T.F.=207.14 INV.(W)=193.32 INV.(E)=193.32

PRO STM M.H. #5 T.F.=206.53 INV.(N)=195.15 INV.(W)=195.15

PRO C.B. #6 TYPE 'C' T.F.=205.43 INV.=201.37

PRO C.B. #5 TYPE 'C' T.F.=205.43 INV.(W)=193.78 INV.(S)=201.19 INV.(E)=193.78

PRO STM M.H. #2 T.F.=204.00 INV.(E)=194.50 INV.(S)=194.50

PRO STM M.H. #3 T.F.=201.07 INV.(N)=193.10 INV.(W)=193.10

PRO C.B. #8 TYPE 'DBL. C' T.F.=200.21 INV.(N,S,E)=195.28

PRO C.B. #7 TYPE 'DBL. C' T.F.=200.21 INV.(S&W)=195.17

PRO STM M.H. #4 T.F.=201.28 INV.(S)=195.73 INV.(W)=195.73

115'-15" HDPE @3.07%
160'-24" HDPE @0.5%
92'-24" HDPE @0.5%
145'-18" HDPE @0.5%
130'-18" HDPE @0.5%
278'-24" HDPE @0.5%
139'-18" HDPE @1.0%
64'-18"HDPE @0.5%

Elevation

210 205 200 195 190 185

0+00 0+50 1+00 1+50 2+00 2+50 3+00 3+50 4+00 4+50 5+00 5+50 6+00 6+50 7+00 7+50 8+00 8+50 9+00 9+47.13

201.81 201.21 201.16 200.73 200.65 200.23 200.15 199.68 199.66 200.81 200.17 203.50 202.42 205.75 205.20 206.64 207.03 206.59 207.86 206.50 207.69 205.93 206.74 203.40 205.75 203.74 204.75 202.28 203.75 201.76 202.75 199.00 201.75 195.73 200.85 195.54 201.07 199.53 202.06

PINE STREET

HALLISEY, PEARSON & CASSIDY
CIVIL ENGINEERS & LAND SURVEYORS
850 MAIN STREET, UNIT #1A
CROMWELL, CONNECTICUT 06416
PHONE: (860)-358-8816, FAX: (860)-721-7799

THE BONGIOVANNI GROUP, INC.
LAND SURVEYORS
10 Pine Street, P.O. Box 1
Newington, Conn. 06111
TEL. (860) 666-0134
FAX (860) 666-3830

Scale: 1"=40'
Checked: AB
Date: 3-3-23

Date: 6-27-22
Drawn: BTM
Revision
GENERAL REVISIONS

PENNY LANE SUBDIVISION
PREPARED FOR
LEPAGE HOMES, INC.
347, 349 & 389 MARION AVENUE
SOUTHINGTON, CONNECTICUT

PINE STREET
PLAN & PROFILE

Sheet 10 of 17

21103

S:\SDSKPROJ\2021_jobs\21103\dwg\21103-Subdiv 121322.dwg

PLAN VIEW

SCALE: 1"=40'

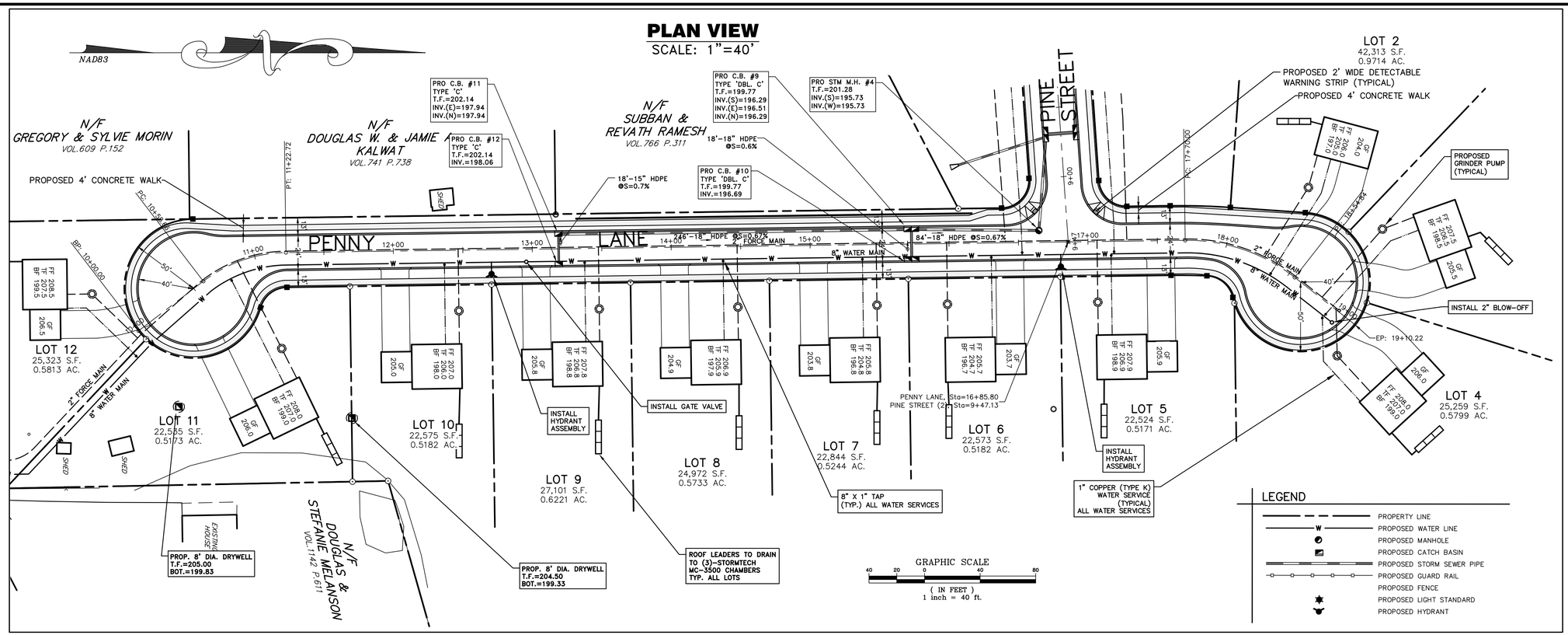

PROFILE

SCALE: HORIZ. 1"=40'
VERT. 1"=40'

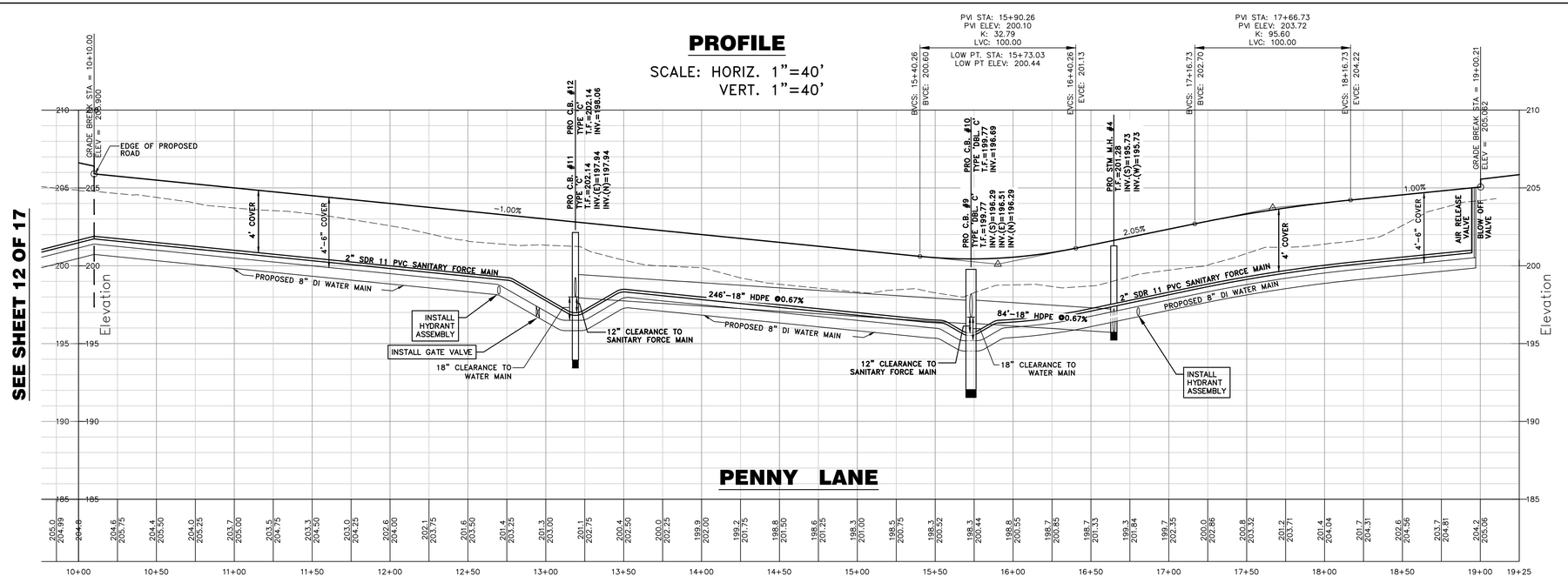

21103

HALLISEY, PEARSON & CASSIDY
CIVIL ENGINEERS & LAND SURVEYORS
650 MAIN STREET, UNIT #1A
CROMWELL, CONNECTICUT 06416
PHONE (860) 258-9182 FAX (860) 721-7709

THE BONGIOVANNI GROUP, INC.
LAND SURVEYORS
1791 Berlin Road
Newington, Conn. 06111
TEL. (860) 666-0134
FAX (860) 666-3830

Scale: 1"=40'
Checked: AB
Date: 6-27-22
Drawn: BTM

Revision	Date
GENERAL REVISIONS	3-3-23

PENNY LANE SUBDIVISION
PREPARED FOR
LEPAGE HOMES, INC.
347, 349 & 389 MARION AVENUE
SOUTHINGTON, CONNECTICUT

PLAN & PROFILE
PENNY LANE

Sheet 11 of 17

S:\SDSKPROJ\2021_jobs\21103\dwg\21103-Subdiv 121322.dwg

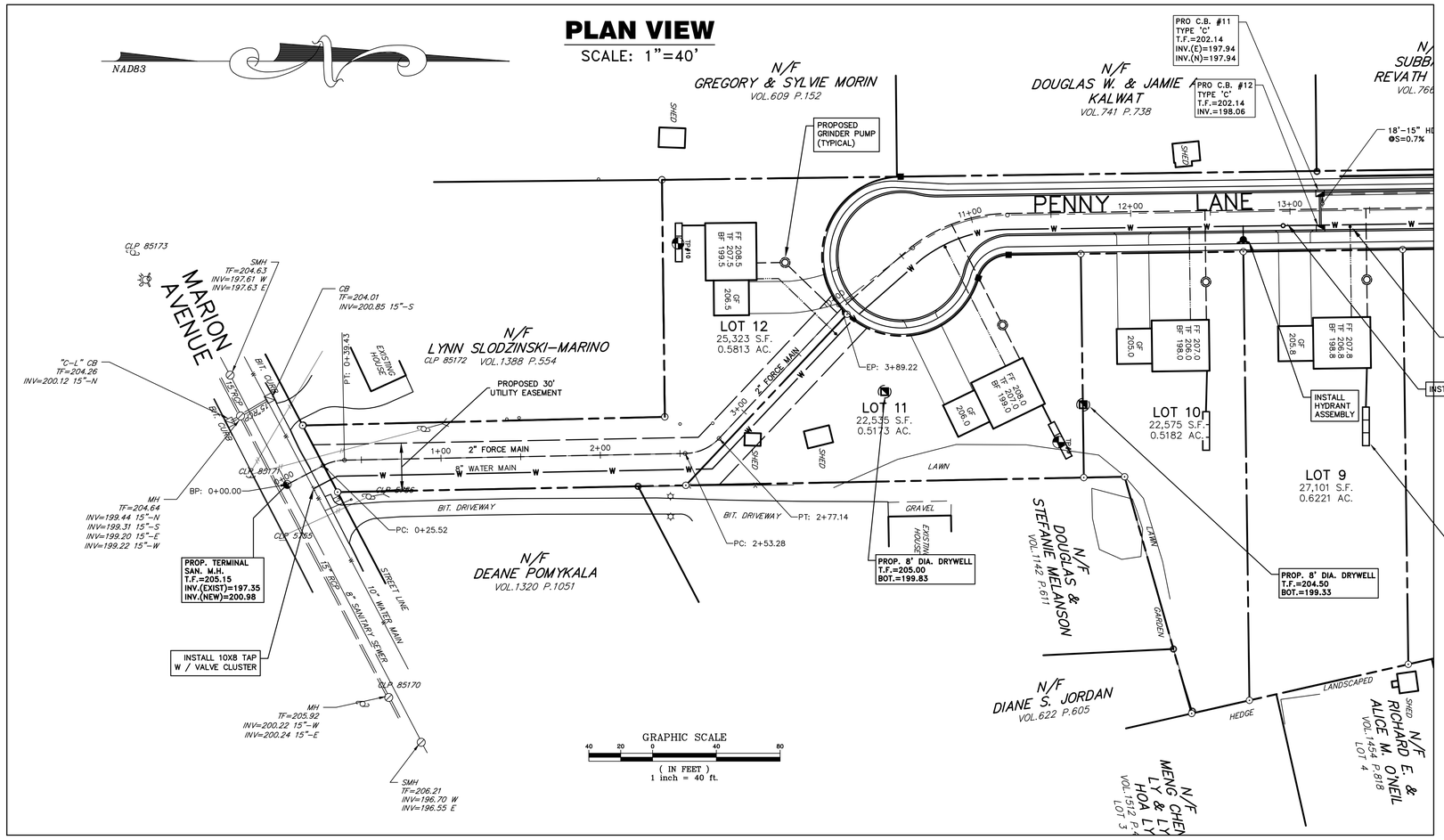

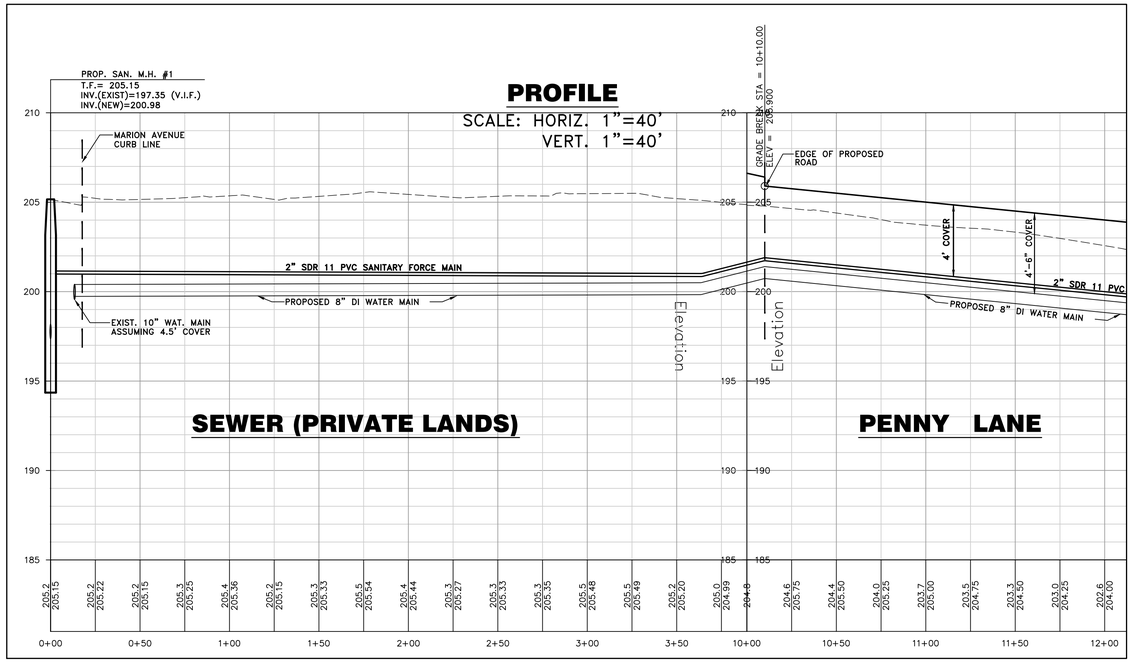

LEGEND

- PROPERTY LINE
- PROPOSED WATER LINE
- PROPOSED MANHOLE
- PROPOSED CATCH BASIN
- PROPOSED STORM SEWER PIPE
- PROPOSED GUARD RAIL
- PROPOSED FENCE
- PROPOSED LIGHT STANDARD
- PROPOSED HYDRANT

HALLISEY, PEARSON & CASSIDY
CIVIL ENGINEERS & LAND SURVEYORS
650 MAIN STREET, UNIT #1A
CROMWELL, CONNECTICUT 06416
PHONE: (860)-529-6812, FAX: (860)-721-7709

THE BONGIOVANNI GROUP, INC.
LAND SURVEYORS
170 Pane Road
Newington, Conn. 06111
TEL. (860) 666-0134
FAX (860) 666-3830

Scale: 1"=40'
Checked: AB
Date: 6-27-22
Drawn: BTM

Revision	Date
GENERAL REVISIONS	3-3-23

PENNY LANE SUBDIVISION
PREPARED FOR
LEPAGE HOMES, INC.
347, 349 & 389 MARION AVENUE
SOUTHINGTON, CONNECTICUT

PLAN & PROFILE
SANITARY SEWER

Sheet 12 of 17

21103

S:\SDSKPROJ\2021_jobs\21103\dwg\21103-Subdiv 121322.dwg

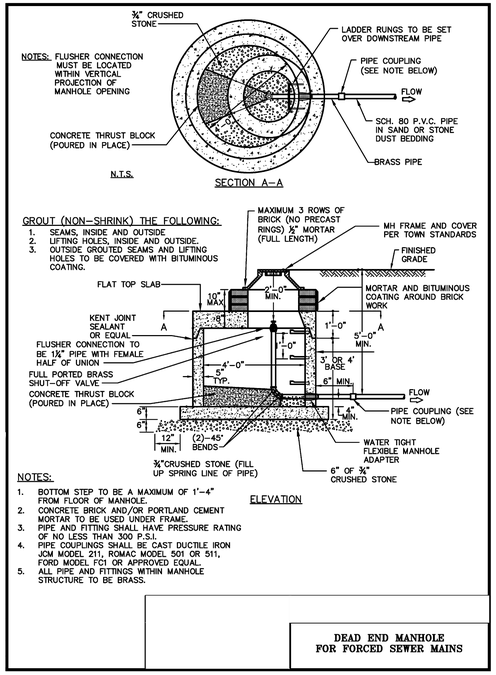

DEAD END MANHOLE FOR FORCED SEWER MAINS

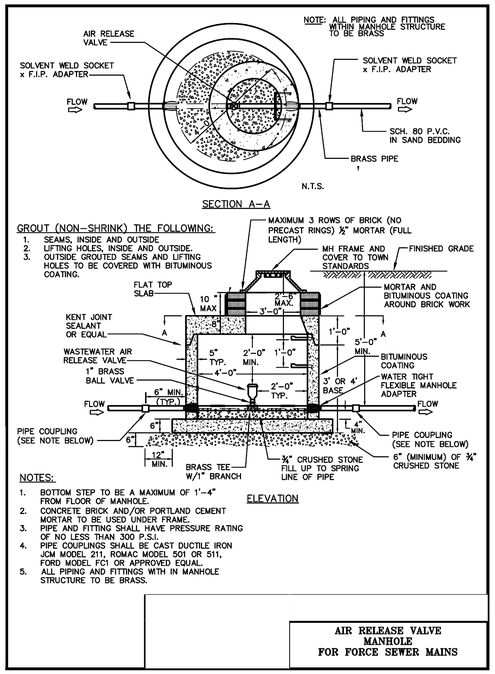

AIR RELEASE VALVE MANHOLE FOR FORCE SEWER MAINS

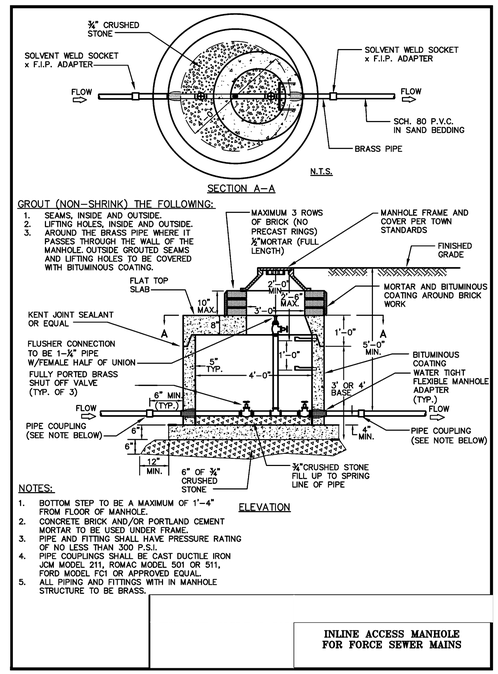

INLINE ACCESS MANHOLE FOR FORCE SEWER MAINS

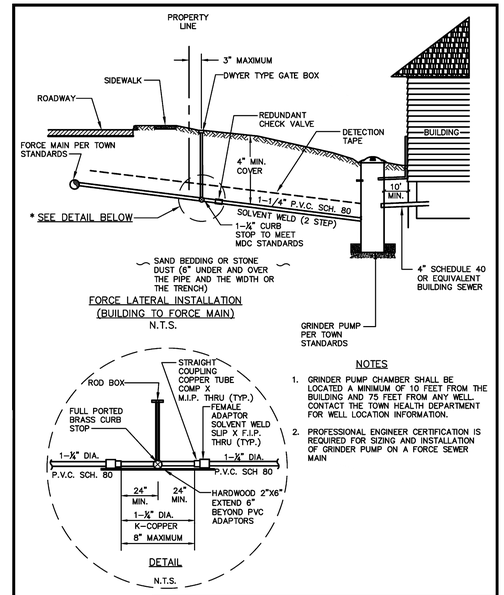

FORCE LATERAL CONNECTION TO SEWER FORCE MAIN

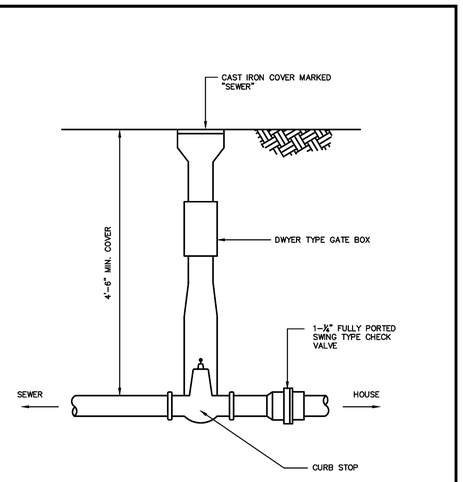

TYPICAL SANITARY CURB BOX

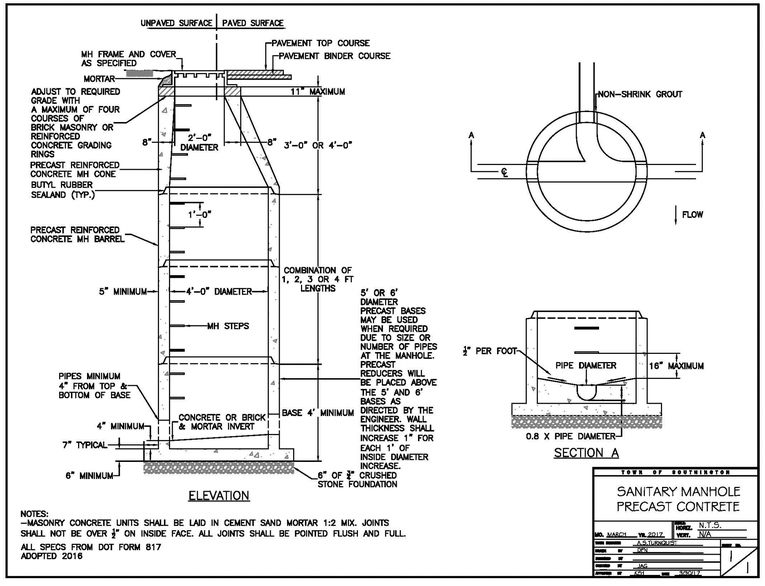

NOTES:
–MASONRY CONCRETE UNITS SHALL BE LAID IN CEMENT SAND MORTAR 1:2 MIX. JOINTS SHALL NOT BE OVER ½" ON INSIDE FACE. ALL JOINTS SHALL BE POINTED FLUSH AND FULL.

ALL SPECS FROM DOT FORM 817 ADOPTED 2016

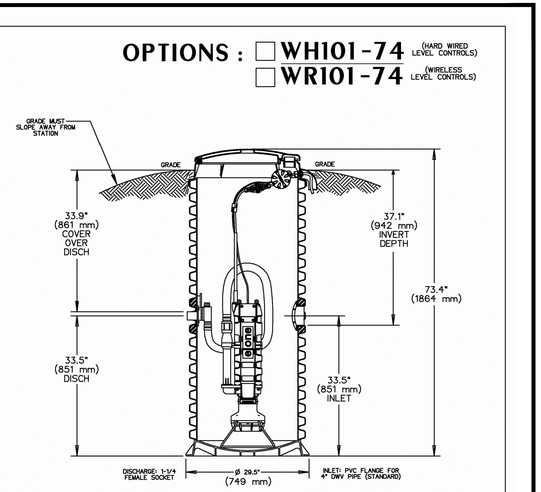

CONCRETE BALLAST MAY BE REQUIRED SEE INSTALLATION INSTRUCTIONS FOR DETAILS

NOTE: DIMENSIONS ARE FOR REF ONLY

AD	SGS	12/22/10	E	
DR BY	CHK'D	DATE	ISSUE	SCALE

e|one SEWER SYSTEMS

MODEL WH101-74 / WR101-74

NA0057P04

HALLISEY, PEARSON & CASSIDY
CIVIL ENGINEERS & LAND SURVEYORS
630 MAIN STREET, UNIT #1A
HARTFORD, CONNECTICUT 06103
PHONE: (860)-529-6812; FAX: (860)-731-7709

THE BONGIOVANNI GROUP, INC.
LAND DEVELOPERS
170 Pine Road
Newington, Conn. 06111
TEL. (860) 666–0134
FAX (860) 666–3830

Scale: AS SHOWN
Checked: AB
Date: 6–27–22
Drawn: BTM

Revision	Date
GENERAL REVISIONS	3–3–23

PENNY LANE SUBDIVISION
PREPARED FOR
LEPAGE HOMES, INC.
347, 349 & 389 MARION AVENUE
SOUTHINGTON, CONNECTICUT

SANITARY SEWER DETAILS

Sheet 13 of 17

21103

S:\SDSKPROJ\2021_jobs\21103\dwg\21103-Subdiv-121322.dwg

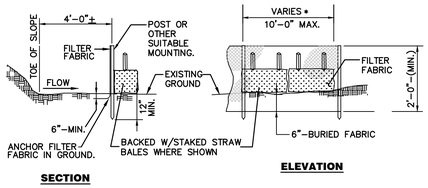

SECTION **ELEVATION**

NOTE:
* POST SPACING AND EMBEDMENT VARIES BASED ON THE MANUFACTURERS REQUIREMENTS.

SILT FENCE
NO SCALE

MAINTENANCE OF SILT FENCE

INSPECT THE SILT FENCE AT LEAST ONCE A WEEK AND WITHIN 24 HOURS OF THE END OF A STORM WITH A RAINFALL AMOUNT OF 0.5 INCH OR GREATER TO DETERMINE MAINTENANCE NEEDS. WHEN USED FOR DEWATERING OPERATIONS, INSPECT FREQUENTLY BEFORE, DURING AND AFTER PUMPING OPERATIONS.

REMOVE THE SEDIMENT DEPOSITS OR, IF ROOM ALLOWS, INSTALL A SECONDARY SEDIMENT FENCE UP SLOPE OF THE EXISTING FENCE WHEN SEDIMENT DEPOSITS REACH APPROXIMATELY ONE HALF THE HEIGHT OF THE EXISTING FENCE.

REPLACE OR REPAIR THE FENCE WITHIN 24 HOURS OF OBSERVED FAILURE. FAILURE OF THE FENCE HAS OCCURRED WHEN SEDIMENT FAILS TO BE RETAINED BY THE FENCE BECAUSE"

(A) THE FENCE HAS BEEN OVER TOPPED, UNDERCUT OR BYPASSED BY RUNOFF WATER,

(B) THE FENCE HAS BEEN MOVED OUT OF POSITION (KNOCKED OVER), OR

(C) THE GEOTEXTILE HAS DECOMPOSED OF BEEN DAMAGED.

WHEN REPETITIVE FAILURES OCCUR AT THE SAME LOCATION, REVIEW CONDITIONS AND LIMITATION FOR USE AND DETERMINE IF ADDITIONAL CONTROLS (e.g. TEMPORARY STABILIZATION OF CONTRIBUTING AREA, DIVERSIONS, STONE BARRIERS) ARE NEEDED TO REDUCE FAILURE RATE OR REPLACE FENCE.

MAINTAIN THE FENCE UNTIL THE CONTRIBUTING AREA IS STABILIZED.

AFTER THE CONTRIBUTING AREA IS STABILIZED DETERMINE IF SEDIMENT CONTAINED BY THE SILT FENCE REQUIRES REMOVAL OR REGRADING AND STABLIZATION. IF THE DEPTH IS GREATER THAN OR EQUAL TO 6 INCHES, REGRADING OR REMOVAL OF THE ACCUMULATED SEDIMENT IS REQUIRED. NO REMOVAL OR REGRADING IS REQUIRED IF SEDIMENT DEPTH IS LESS THAN 6 INCHES.

REMOVE THE FENCE BY PULLING UP THE SUPPORT POSTS AND CUTTING THE GEOTEXTILE AT GROUND LEVEL. REGRADE OR REMOVE SEDIMENT AS NEEDED, AND STABILIZE DISTURBED SOILS.

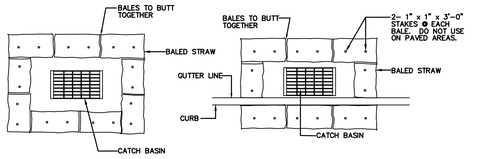

CATCH BASIN WITHOUT CURB **CATCH BASIN WITH CURB**

SEDIMENTATION CONTROL BALES
NO SCALE

MAINTENANCE OF STRAW BALE CHECK DAM

INSPECT THE STRAW BALE CHECK DAM AT LEAST ONCE A WEEK AND WITHIN 24 HOURS OF THE END OF A STORM WITH A RAINFALL AMOUNT OF 0.5 INCHES OR GREATER TO DETERMINE MAINTENANCE NEEDS. FOR DE WATERING OPERATIONS AND, INSPECT FREQUENTLY BEFORE, DURING AND AFTER PUMPING OPERATIONS.

REMOVE THE SEDIMENT DEPOSITS OR INSTALL A SECONDARY BARRIER WHEN SEDIMENT DEPOSITS REACH APPROXIMATELY ONE HALF THE HEIGHT OF THE BARRIER. REPLACE OR REPAIR THE BARRIER WITHIN 24 HOURS OF OBSERVED FAILURE. FAILURE OF THE BARRIER HAS OCCURRED WHEN SEDIMENT FAILS TO BE RETAINED BY THE THE BARRIER BECAUSE:

A) THE BARRIER HAS BEEN OVERTOPPED, UNDERCUT, OR BYPASSED BY RUNOFF WATER
B) THE BARRIER HAS BEEN MOVED OUT OF POSITION.
C) THE STRAW BALES HAVE DETERIORATED.

WHEN REPETITIVE FAILURE OCCUR AT THE SAME LOCATION REVIEW CONDITIONS AND LIMITATIONS FOR USE AND DETERMINE IF ADDITIONAL CONTROLS ARE NEEDED TO REDUCE FAILURE RATE OR REPLACE STRAW BALE BARRIER.

MAINTAIN STRAW BALE BARRIER UNTIL CONTRIBUTING AREA IS STABILIZED. AFTER UPSLOPE AREAS HAVE BEEN STABILIZED PULL THE STAKES OUT OF THE STRAWBALES. UNLESS OTHERWISE REQUIRED NO REMOVAL OF OR REGRADING OF ACCUMULATED SEDIMENT IS NECESSARY. THE STRAW BALES MAY THEN BE LEFT IN PLACE OR BROKEN UP FOR GROUND COVER.

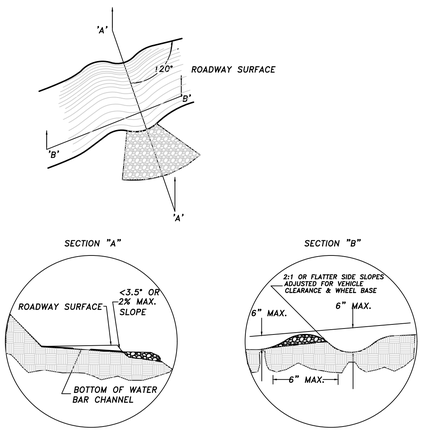

WATER BAR DETAIL
(N.T.S.)

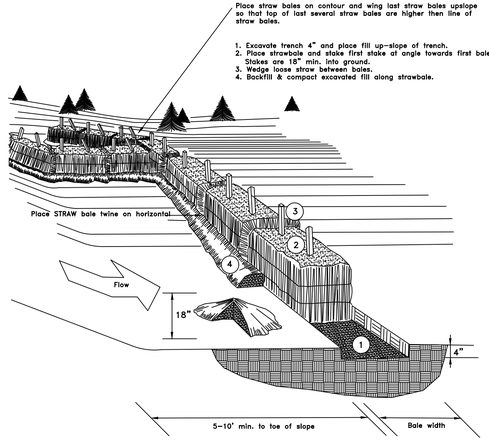

STAKED STRAW BALES
N.T.S.

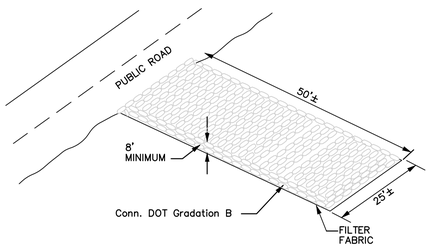

CONSTRUCTION ENTRANCE
NO SCALE

MAINTENANCE OF CONSTRUCTION ENTRANCE

MAINTAIN THE ENTRANCE IN A CONDITION WHICH WILL PREVENT TRACKING AND WASHING OF SEDIMENT ONTO PAVED SURFACES. PROVIDE PERIODIC TOP DRESSING WITH ADDITIONAL STONE OR ADDITIONAL LENGTH AS CONDITIONS DEMAND. REPAIR ANY MEASURES USED TO TRAP SEDIMENT AS NEEDED. IMMEDIATELY REMOVE ALL SEDIMENT SPILLED, DROPPED, WASHED OR TRACKED ONTO PAVED SURFACES. ROADS ADJACENT TO A CONSTRUCTION SITE SHALL BE LEFT CLEAN AT THE END OF EACH DAY.

IF THE CONSTRUCTION ENTRANCE IS BEING PROPERLY MAINTAINED AND THE ACTION OF VEHICLE TRAVELING OVER THE STONE PAD IS NOT SUFFICIENT TO REMOVE THE MAJORITY OF THE SEDIMENT, THEN EITHER (1) INCREASE THE LENGTH OF THE CONSTRUCTION ENTRANCE, (2) MODIFY THE CONSTRUCTION ACCESS ROAD SURFACE, OR (3) INSTALL WASHING RACKS AND ASSOCIATED SETTLING AREA OR SIMILAR DEVICES BEFORE THE VEHICLE ENTERS A PAVED AREA.

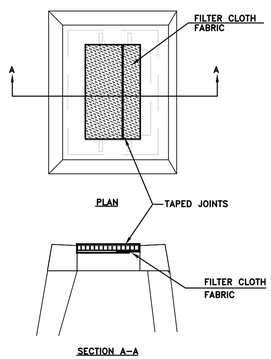

FILTER FABRIC ENVELOPE
NOT TO SCALE

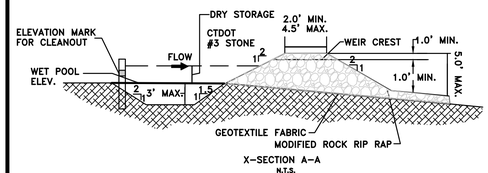

X-SECTION A-A
N.T.S.

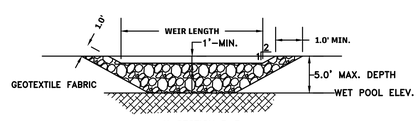

X-SECTION B-B

TEMPORARY SEDIMENT TRAP
N.T.S.

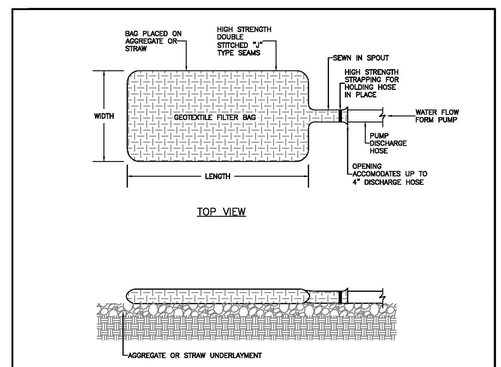

NOTES:

1. INSTALL FILTER BAG ON A SLOPE SO INCOMING WATER FLOWS DOWNHILL THROUGH FILTER BAG WITHOUT CREATING MORE EROSION.

2. STRAP THE NECK OF THE FILTER BAG TIGHTLY TO THE DISCHARGE HOSE.

3. PLACE BAG ON AGGREGATE OR HAYBALE BED TO MAXIMIZE WATER FLOW THROUGH THE SURFACE OF THE BAG.

4. FILTER BAG IS FULL WHEN IT CAN NO LONGER EFFICIENTLY FILTER SEDIMENT OR ALLOW WATER TO PASS AT A REASONABLE RATE. CHECK MANUFACTURERS RECOMMENDATIONS ON ACCEPTABLE FLOW RATES FOR THE FILTER BAG IN ORDER TO AVOID RUPTURE OR FAILURE AT HOSE ATTACHMENT.

5. FOLLOWING USE, IF ALLOWED, BAG MAY BE CUT OPEN AND THE CONTENTS SEEDED AFTER THE REMOVAL OF VISIBLE FABRIC. IF NOT ALLOWED TO REUSE SEDIMENT, BAG SHALL BE HAULED OFF SITE AND DISPOSED OF IN AN APPROVED MANNER.

ALL SPECS FROM DOT FORM 817
ADOPTED 2016

TOWN OF SOUTHINGTON
GEOTEXTILE FILTER BAG
SCALE: N.T.S.
DATE: N/A
NO. ISSUED BY: YR. ISSUED
DESIGNED BY
DRAWN BY
CHECKED BY
APPROVED BY
SHEET 1 OF 1

HALLISEY, PEARSON & CASSIDY
CIVIL ENGINEERS & LAND SURVEYORS
630 MAIN STREET, UNIT #14
CHESHIRE, CONNECTICUT 06410
PHONE: (860)-529-6812; FAX: (860)-721-7709

THE BONGIOVANNI GROUP, INC.
LAND DEVELOPERS
170 Pane Road
Newington, Conn. 06111
TEL. (860) 666-0134
FAX (860) 666-3830

Scale: AS SHOWN
Checked: AB
Date: 6-27-22
Drawn: BTM

Revision	Date
GENERAL REVISIONS	3-3-23

PENNY LANE SUBDIVISION
PREPARED FOR
LEPAGE HOMES, INC.
347, 349 & 389 MARION AVENUE
SOUTHINGTON, CONNECTICUT

EROSION & SEDIMENT CONTROL DETAILS

Sheet 14 of 17

21103

S:\SOS\PROJ\2021_Jobs\21103\dwg\21103-Subdiv 121322.dwg

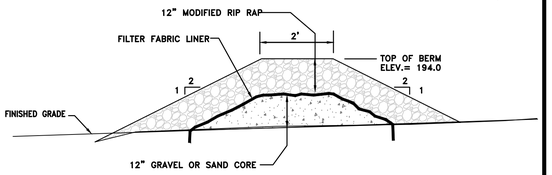

RIPRAP FILTER BERM
N.T.S.

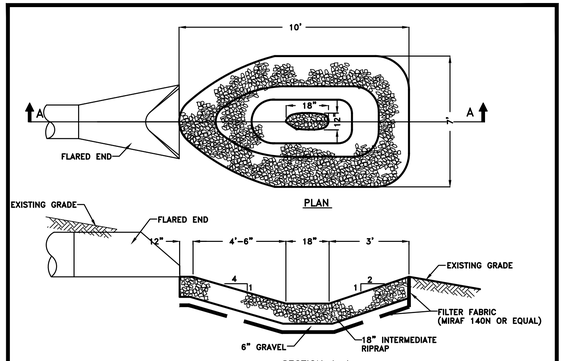

RIPRAP PLUNGE POOL
N.T.S.

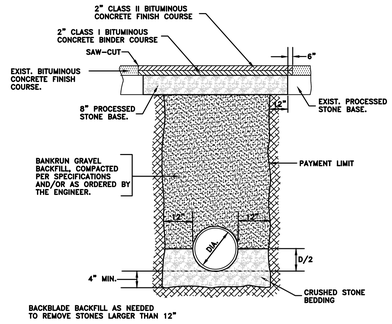

TYPICAL STORM TRENCH CROSS SECTION
NOT TO SCALE

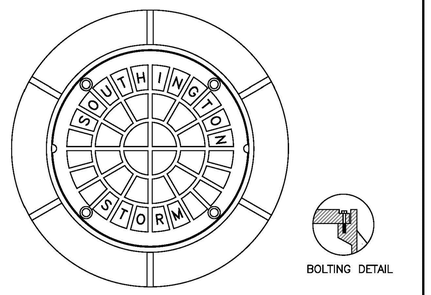

NOTES:

1. COVER SHALL BE BOLTED TO FRAME WITH 4 RECESSED, EQUALLY SPACED ¾"-13SS HEX HEAD CAP SCREWS AND MADE WATERTIGHT WITH ¾" NEOPRENE GASKET AND NON PENETRATING PICK HOLES
2. FLANGE SHALL HAVE 3 EQUALLY SPACED 1" DIAMETER ANCHORING HOLES ON A 32" DIAMETER CENTER
3. CASTINGS ARE SUPPLIED WITHOUT PAINT OR COATING

ALL SPECS FROM DOT FORM 817
ADOPTED 2016

TOWN OF SOUTHINGTON

TOWN OF SOUTHINGTON
STANDARD BOLTED STORM
MANHOLE DETAIL

NO.	MARK	YR.	BY
		8/17	

SCALE: N.T.S.
DWG. NO.
VERT. N/A
SHEET NO. 1 OF 1

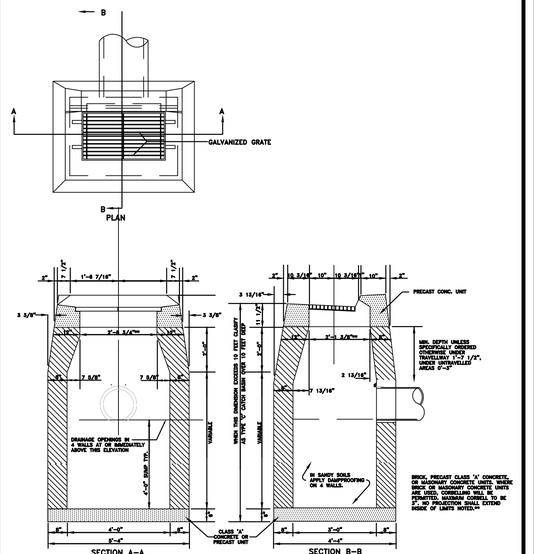

WHERE PRECAST CONC. UNIT IS USED FOR SUMP, THE TOP OF THE UNIT SHALL BE AT LEAST 8" BELOW THE BOTTOM OF THE OUTLETTING FROM THE CATCH BASIN.

TYPE "C" CATCH BASIN
N.T.S.

HALLISEY, PEARSON & CASSIDY
CIVIL ENGINEERS & LAND SURVEYORS
830 MAIN STREET, UNIT #1A
CROMWELL, CONNECTICUT 06416
PHONE: (860)-529-8812, FAX: (860)-721-7709

THE BONGIOVANNI GROUP, INC.
Land Development Consultants
170 Pane Road
Newington, Conn. 06111
TEL. (860) 666-0134
FAX (860) 666-3830

Date	Revision
3-3-23	GENERAL REVISIONS

Scale: AS SHOWN
Checked: AB
Date: 6-27-22
Drawn: BTM

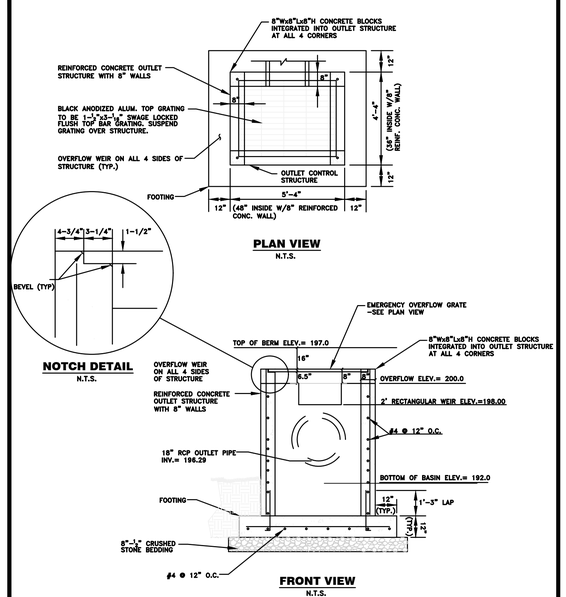

DETENTION BASIN OUTLET
CONTROL STRUCTURE
N.T.S.

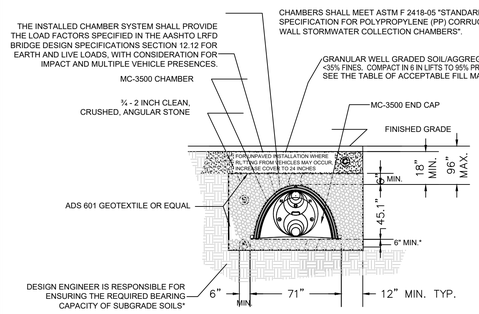

THIS CROSS SECTION DETAILS THE REQUIREMENTS
NECESSARY TO SATISFY THE LOAD FACTORS SPECIFIED IN THE
AASHTO LRFD BRIDGE DESIGN SPECIFICATIONS SECTION 12.12
FOR EARTH AND LIVE LOADS USING STORMTECH CHAMBERS

*SEE STORMTECH DESIGN MANUAL

MC-3500 TYPICAL CROSS SECTION
N.T.S.

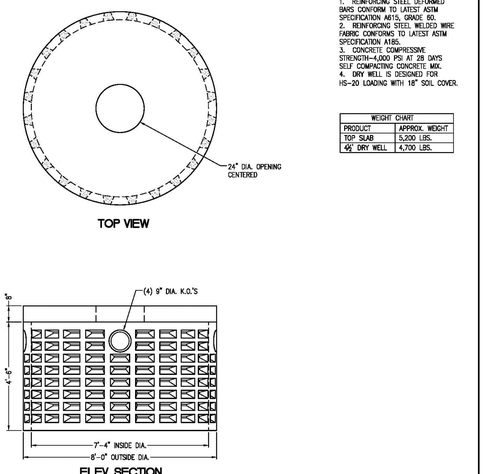

8' DIA. DRY WELL

NOTES:
1. REINFORCING STEEL DEFORMED BARS CONFORM TO LATEST ASTM SPECIFICATION A615, GRADE 60.
2. REINFORCING STEEL WELDED WIRE FABRIC CONFORMS TO LATEST ASTM SPECIFICATION A185.
3. CONCRETE COMPRESSIVE STRENGTH=4,000 PSI AT 28 DAYS SELF COMPACTING CONCRETE MIX.
4. DRY WELL IS DESIGNED FOR HS-20 LOADING WITH 18" SOIL COVER.

WEIGHT CHART	
PRODUCT	APPROX. WEIGHT
TOP SLAB	5,200 LBS.
4'ø DRY WELL	4,700 LBS.

UNITED CONCRETE PRODUCTS INC.
173 CHURCH STREET TEL. (800) 234-3119 FAX. (203) 265-4941
YALESVILLE, CT 06492 TEL. (203) 269-3119 WWW.UNITEDCONCRETE.COM

REINFORCED CONCRETE CULVERT ENDS

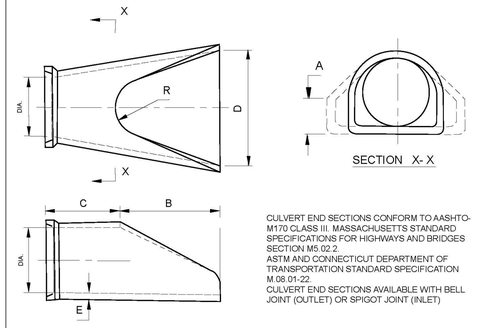

CULVERT END SECTIONS CONFORM TO AASHTO-M170 CLASS III. MASSACHUSETTS STANDARD SPECIFICATIONS FOR HIGHWAYS AND BRIDGES SECTION M5.02.2
ASTM AND CONNECTICUT DEPARTMENT OF TRANSPORTATION STANDARD SPECIFICATION M.08.01-22
CULVERT END SECTIONS AVAILABLE WITH BELL JOINT (OUTLET) OR SPIGOT JOINT (INLET)

DIA	A	B	C	D	E	R
12"	4"	2'-0"	4'-0 7/8"	2'-0"	3"	9"
15"	6"	2'-3"	3'-10"	2'-6"	3"	11"
18"	9"	2'-3"	3'-10"	3'-0"	3"	12"
24"	9 1/2"	3'-7 1/2"	2'-6"	4'-0"	3"	14"
30"	12"	4'-6"	1'-7 3/4"	5'-0"	3 1/2"	15"
36"	15"	5'-3"	2'-10 3/4"	6'-0"	4"	20"
42"	21"	5'-3"	2'-11"	6'-6"	4 1/2"	22"
48"	24"	6'-0"	2'-2"	7'-0"	5"	22"
54"	27"	5'-5"	2'-11"	7'-6"	5 1/2"	24"
60"	30"	5'-0"	3'-3"	8'-0"	6"	24"

UNITED CONCRETE PRODUCTS INC.
173 CHURCH STREET TEL. 800 234-3119 FAX. (203) 265-4941
YALESVILLE, CT 06492 (203) 269-3119

PENNY LANE SUBDIVISION
PREPARED FOR
LEPAGE HOMES, INC.
347, 349 & 389 MARION AVENUE
SOUTHINGTON, CONNECTICUT

STORMWATER MANAGEMENT DETAILS

Sheet 15 of 17

21103

S:\SDSKPRO\(2022)_jobs\21103\dwg\21103-Subdiv 121322.dwg

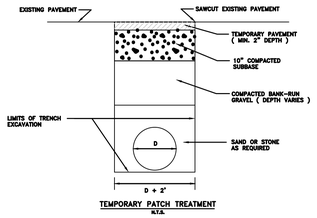

TEMPORARY PATCH TREATMENT
N.T.S.

TEMPORARY PATCH TREATMENT NOTES

1. PAVEMENT – TEMPORARY HOT MIX BITUMINOUS CONCRETE PAVEMENT SHALL BE PLACED WITH A MINIMUM THICKNESS OF TWO (2) INCHES WITHIN TWENTY FOUR (24) HOURS OF EXCAVATION. NO EXCAVATION WILL BE ALLOWED ON FRIDAY UNLESS IT IS TO BE PAVED BY THE END OF THE WORK DAY. NO COLD PATCH WILL BE ALLOWED FOR ANY TEMPORARY REPAIR.
2. SUBBASE – THE EXCAVATED MATERIALS WILL BE ACCEPTABLE FOR USE AS SUBBASE MATERIAL IF APPROVED BY THE TOWN INSPECTOR. IF THE MATERIAL IS UNACCEPTABLE, TEN (10) INCHES OF PROCESSED AGGREGATE STONE BASE COMPACTED IN TWO EQUAL LIFTS WILL BE REQUIRED.
3. NO PERMITS WILL BE ISSUED DURING THE PERIOD THAT THE BITUMINOUS BATCH PLANTS ARE CLOSED EXCEPT FOR EMERGENCY REPAIRS.
4. STEEL PLATES TO TEMPORARILY COVER EXCAVATIONS, MAY BE USED IF APPROVED BY THE TOWN INSPECTOR. PLATES MUST BE ANCHORED SECURELY TO THE SURROUNDING PAVEMENT AND RAMPED WITH BITUMINOUS CONCRETE. NO PLATES WILL BE ALLOWED BETWEEN NOVEMBER 15 AND APRIL 1.

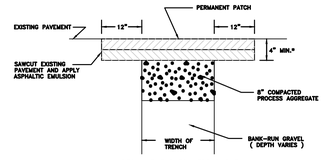

PERMANENT PATCH TREATMENT
N.T.S.

PERMANENT PATCH TREATMENT NOTES

THE TEMPORARY PATCH SHALL BE REMOVED, THE EXISTING PAVEMENT CUT BACK A MINIMUM OF TWELVE (12) INCHES OR AS DIRECTED FROM THE TRENCH TO MAKE A NEAT CLEAN SQUARE JOINT WHICH WILL OVERLAP THE ORIGINAL SUBGRADE.

A MINIMUM UNIFORM FOUR (4) INCH DEPTH SHALL BE EXCAVATED, CARE MUST BE TAKEN TO REMOVE ALL LARGE STONES AND UNSUITABLE MATERIAL. THE AREA SHALL BE THOROUGHLY COMPACTED. AN ASPHALTIC EMULSION, CONFORMING TO REQUIREMENTS OF AASHTO M140, GRADE SS-1 OR CSS-1, SHALL BE APPLIED AS FOLLOWS:

1. THE EMULSION SHALL BE APPLIED TO THE CLEAN, DRY EDGES OF THE EXISTING PAVEMENT PRIOR TO THE PLACING OF THE FIRST COURSE OF BITUMINOUS CONCRETE.
2. AFTER THE FIRST COURSE OF BITUMINOUS CONCRETE HAS BEEN PLACED AND COMPACTED, ANOTHER APPLICATION OF EMULSION SHALL BE APPLIED TO THE EDGES OF THE PATCH. THIS SHALL BE REPEATED AFTER THE PLACING AND COMPACTING OF EACH LIFT REQUIRED TO BRING THE PATCH UP TO THE LEVEL OF THE EXISTING PAVEMENT.
3. A FINAL APPLICATION OF EMULSION SHALL BE APPLIED TO THE JOINT BETWEEN THE PATCH AND THE EXISTING PAVEMENT SURFACE. THE EMULSION SHALL BE APPLIED TO THE VERTICAL EDGES OF THE EXISTING PAVEMENT AND FOUR INCHES ARE ON THE EXISTING PAVEMENT AND PATCH RESPECTIVELY.

A HOT BITUMINOUS CONCRETE MIX (CLASS 2 – D.O.T. SPECS.) SHALL BE PLACED IN TWO (2) INCH (ROLLED) LIFTS. THE FINAL LIFT SHALL BE EVEN WITH THE EXISTING PAVEMENT AND CROSS ROLLED IN ADDITION TO THE NORMAL ROLLING.

* NOTE: THE FOUR (4) INCH DEPTH IS THE MINIMUM DEPTH. IF THE ORIGINAL PAVEMENT IS THICKER THAN FOUR (4) INCHES, THE MINIMUM DEPTH SHALL BE INCREASED TO THE DEPTH OF THE EXISTING PAVEMENT.
EXAMPLE: NINE (9) INCH ROADWAY, WOULD REQUIRE A NINE (9) INCH PERMANENT PATCH.

PENALTY: FAILURE OF THE PERMITTEE TO COMPLY WITH THE ABOVE REGULATIONS WILL MAKE HIM SUBJECT TO A FINE OF $100.00 PER DAY FOR EACH DAY THAT THE VIOLATION EXISTS. IF THE COMPLETED WORK IS UNSATISFACTORY TO THE TOWN ENGINEER AND/OR THE DIRECTOR OF PUBLIC WORKS, THE CONTRACTOR SHALL BE NOTIFIED BY REGISTERED MAIL, ALLOWING HIM FIVE (5) DAYS TO CORRECT SUCH PAVEMENT CUT. IF THE PAVEMENT CUT IS NOT REPAIRED, THE TOWN OF SOUTHINGTON WILL MAKE THE NECESSARY REPAIRS AND BILL THE CONTRACTOR FOR THE COST OF THE SAME.

Typical Gravity Wall Section

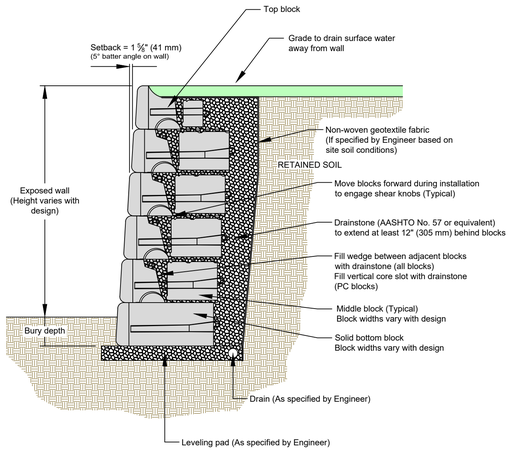

This drawing is for reference only. Determination of the suitability and/or manner of use of any details contained in this document is the sole responsibility of the design engineer of record. Final project designs, including all construction details, shall be prepared by a licensed professional engineer using the actual conditions of the proposed site.

DRAWN BY:	JRJ	TITLE:	Typical Gravity Wall Detail
APPROVED BY:	JRJ		
DATE:	17MAR2016		
SHEET:	1 of 1	FILE:	1 Typical Gravity Wall Detail 031716.dwg

REDI-ROC
05481 US 31 SOUTH, CHARLEVOIX, MI 49720
(866) 222-8400 ext 3010 • engineering@redi-rock.com
www.redi-rock.com

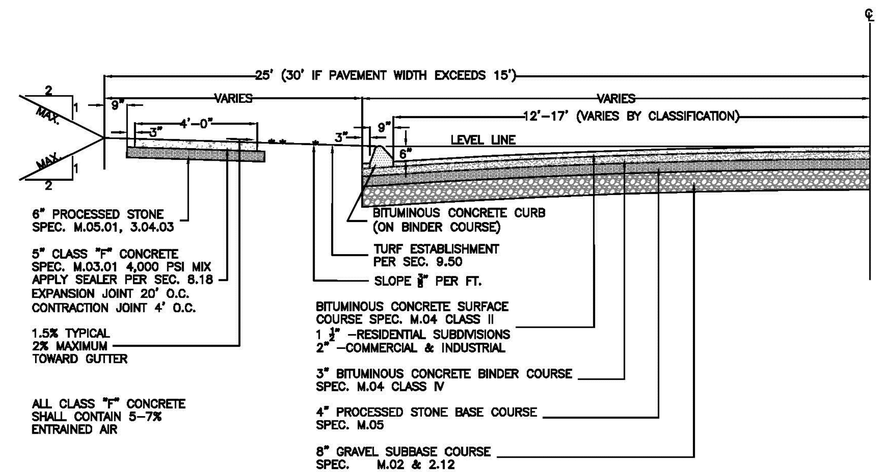

ALL SPECS FROM DOT FORM 817
ADOPTED 2016

TOWN OF SOUTHINGTON
STANDARD SECTION
FOR CONSTRUCTION OF
SUBDIVISION ROADWAYS

NO. FEBRUARY YR. 2022 | HORIZ. N.T.S. | VERT. N/A

A.S.TURNQUIST
RDH
JAG
DOT 2/1/2022

SHT. NO. 1 OF 1

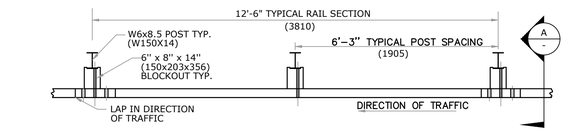

PLAN

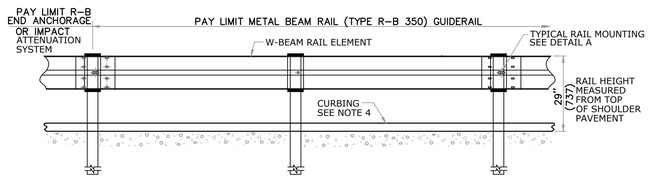

ELEVATION

METAL BEAM RAIL (TYPE R-B 350)

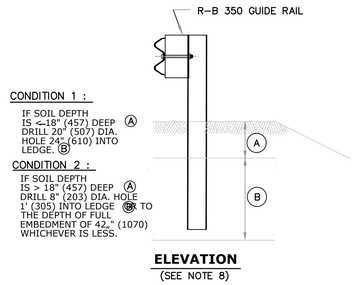

ELEVATION
(SEE NOTE 8)

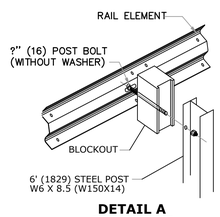

DETAIL A
RAIL MOUNTING

NOTES:
1) USE OF BITUMINOUS CURBING REQUIRES APPROVAL OF THE CITY ENGINEER.
2) BITUMINOUS CURBING IN CONJUNCTION WITH NEW CONSTRUCTION OR MILLING/ OVERLAY SHALL BE PLACED ON BINDER COURSE, UNLESS AN ALTERNATIVE IS APPROVED BY THE TOWN ENGINEER.

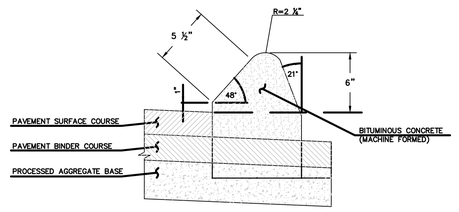

BIT. CONCRETE LIP CURBING
N.T.S.

HALLISEY, PEARSON & CASSIDY
CIVIL ENGINEERS & LAND SURVEYORS
630 MAIN STREET, UNIT #1A
ROCKY HILL, CONNECTICUT 06067
PHONE: (860)-529-6813; FAX: (860)-721-7709

THE BONGIOVANNI GROUP, INC.
LAND DEVELOPERS
170 Pane Road
Newington, Conn. 06111
TEL. (860) 666-0134
FAX (860) 666-3830

Scale: AS SHOWN
Checked: AB
Date: 6-27-22
Drawn: BTM

Revision	Date
GENERAL REVISIONS	3-3-23

PENNY LANE SUBDIVISION
PREPARED FOR
LEPAGE HOMES, INC.
347, 349 & 389 MARION AVENUE
SOUTHINGTON, CONNECTICUT

SITE DETAILS

Sheet 16 of 17

21103

S:\SOS\PROJ\2021_Jobs\21103\dwg\21103-Subdiv 121322.dwg

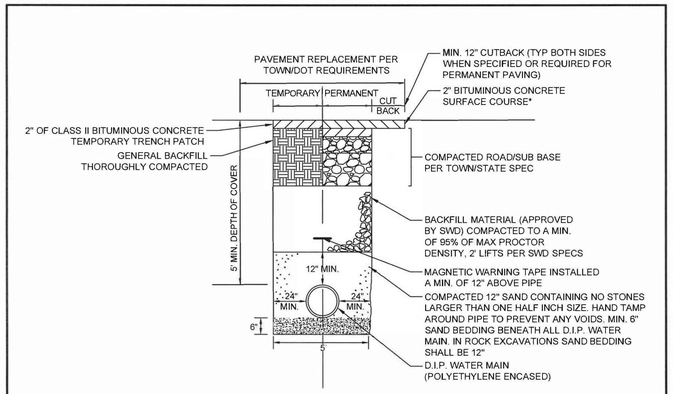

*NOTE: REFER TO THE TOWN OF SOUTHINGTON ENGINEERING DEPARTMENT SPECIFICATIONS FOR ASPHALT PAVING AND SUBBASE SPCIFICATIONS

SOUTHINGTON WATER DEPARTMENT	WATER MAIN TRENCH DETAIL NOT TO SCALE	
	DATE: 7/1/2016	DWG NO.: SD-1

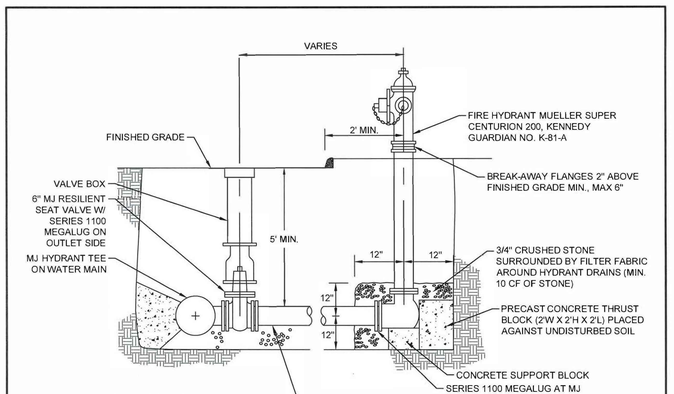

NOTE: FIRE HYDRANTS SHALL HAVE 5-1/4" MAIN VALVE OPENING, (2) 2-1/2" HOSE NOZZLES, (1) 4-1/2" PUMPER NOZZLE W/ A 5" STORZ FITTING AND A 6" INLET SHOE.

SOUTHINGTON WATER DEPARTMENT	HYDRANT DETAIL NOT TO SCALE	
	DATE: 7/1/2016	DWG NO.: SD-2

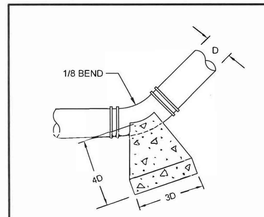

HORIZONTAL THRUST BLOCK DETAIL
PLAN VIEW

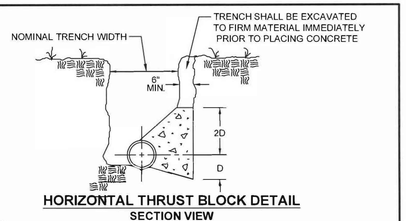

HORIZONTAL THRUST BLOCK DETAIL
SECTION VIEW

NOTES:
1. CONCRETE FOR THRUST BLOCKS SHALL BE PER SWD SPECIFICATIONS.
2. D-DIAMETER OF WATER MAIN.
3. MEGALUG RESTRAINING GLANDS SHALL BE USED ON ALL MJ FITTINGS
4. THRUST BLOCKS SHALL BE INSTALLED AT ALL PERMANENT HORIZONTAL CHANGES IN DIRECTION OR AS DIRECTED BY THE ENGINEER.
5. ALL TEES, BENDS, PLUGS, ETC. SHALL BE WRAPPED IN 8 MIL POLY PRIOR TO CONCRETE PLACEMENT.

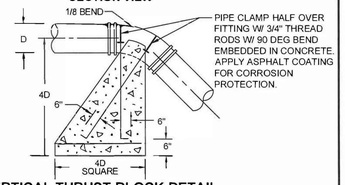

VERTICAL THRUST BLOCK DETAIL
ELEVATION VIEW

SOUTHINGTON WATER DEPARTMENT	THRUST BLOCK DETAILS NOT TO SCALE	
	DATE: 7/1/2016	DWG NO.: SD-3

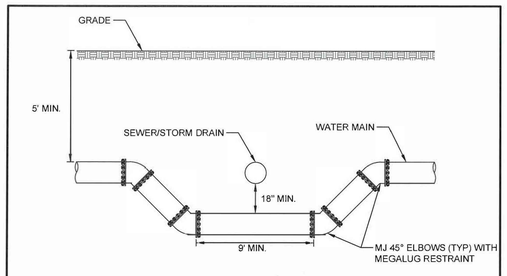

NOTE: PIPE MAY BE DEFLECTED (WITHIN MANUFACTURER'S TOLERANCE) BENEATH SEWER/STORM DRAIN WHERE PERMITTED BY THE SWD

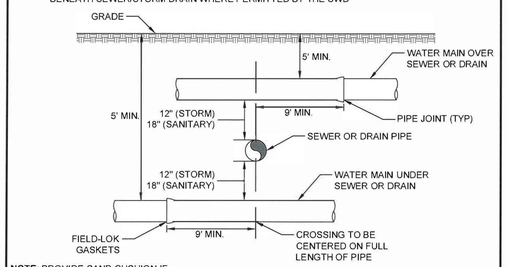

NOTE: PROVIDE SAND CUSHION IF DISTURBED. PROPER BEDDING AT THE DISCRETION OF THE SWD.

SOUTHINGTON WATER DEPARTMENT	SEWER/STORM DRAIN CROSSING DETAIL NOT TO SCALE	
	DATE: 7/1/2016	DWG NO.: SD-4

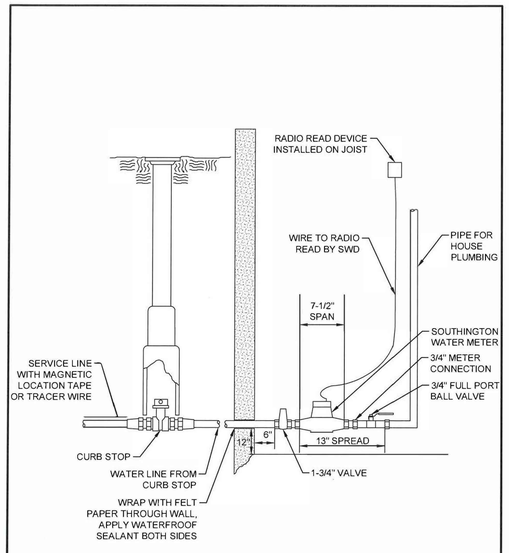

NOTE: FOR SERVICE LINE INSTALLATIONS THROUGH A SLAB THE SERVICE LINE SHALL BE INSTALLED WITHIN A MIN. 3" PVC SLEEVE WITH LINK SEAL ADJACENT TO FOUNDATION WALL

SOUTHINGTON WATER DEPARTMENT	TYPICAL WATER METER INSTALLATION FOR RESIDENTIAL 5/8" AND 3/4" METERS NOT TO SCALE	
	DATE: 7/1/2016	DWG NO.: SD-5

HALLISEY, PEARSON & CASSIDY
CIVIL ENGINEERS & LAND SURVEYORS
630 MAIN STREET, UNIT #14
COVENTRY, CONNECTICUT 06238
PHONE: (860)-429-6812; FAX: (860)-721-7709

THE BONGIOVANNI GROUP, INC.
LAND DEVELOPERS
170 Pane Road
Newington, Conn. 06111
TEL. (860) 666-0134
FAX (860) 666-3830

Scale: AS SHOWN
Checked: AB
Date: 6-27-22
Drawn: BTM

Revision	Date
GENERAL REVISIONS	3-3-23

PENNY LANE SUBDIVISION
PREPARED FOR
LEPAGE HOMES, INC.
347, 349 & 389 MARION AVENUE
SOUTHINGTON, CONNECTICUT

DETAILS

Sheet 17 of 17

21103

S:\SDSKPROJ\2021_jobs\21103\dwg\21103-Subdiv 121322.dwg