STANDARD SITE PLAN NOTES:

1. PARCEL OWNER: 120 INDUSTRIAL DRIVE LLC
2. CONTOUR INTERVAL = 2'
3. ELEVATIONS BASED ON U.S.C. & G.S. DATUM.
4. TOPOGRAPHY IS FROM TOWN TOPOGRAPHY & MAP REF. #2.
5. THE INDICATED EXISTING UTILITIES ARE BASED ON LIMITED INFORMATION. THE LOCATIONS ARE APPROXIMATE AND NOT GUARANTEED. ALL UTILITIES MAY NOT BE SHOWN. PRIOR TO ANY EXCAVATION, CONTRACTOR TO NOTIFY "CALL BEFORE YOU DIG" AT 1-800-922-4455.
6. CONTRACTOR REQUIRED TO FIELD VERIFY ALL DIMENSIONS, ELEVATIONS, QUANTITIES AND DETAILS PRIOR TO ANY CONSTRUCTION.
7. LOT AREA = SEE MAP
8. PROPERTY IS LOCATED IN ZONE I-1 (SEE ZONING TABLE).
9. ALL CONSTRUCTION SHALL CONFORM TO CONN. DOT 816a.
10. SEE ZONING TABLE FOR PARKING REQUIREMENTS.
11. LOT COVERAGE = 22.3% (ALLOWED = 35%)
12. PRESENT LAND USE: VACANT
PROPOSED LAND USE: INDUSTRIAL
13. PLANNING AND ENGINEERING DEPARTMENTS TO BE NOTIFIED AT 276-6248 AND 276-6231, 24 HOURS IN ADVANCE OF ANY CONSTRUCTION ACTIVITY.
14. ALL WORK IN CONNECTION WITH THIS PLAN SHALL BE COMPLETED WITHIN FIVE YEARS OF THE DATE OF APPROVAL, OR THE APPROVAL IS NO LONGER VALID.
15. NO CERTIFICATE OF OCCUPANCY SHALL BE ISSUED UNTIL ALL SITE WORK IS COMPLETED, OR WHEN SPECIFICALLY APPROVED BY THE PLANNING AND ZONING COMMISSION.
16. THE APPLICANT SHALL BE RESPONSIBLE FOR OBTAINING THE NECESSARY STATE AND FEDERAL ENVIRONMENTAL PERMITS IF ANY.
17. GROUNDWATER ZONE GA
18. PROPOSED BUILDING FOOTPRINT = 4,800 S.F.
19. **STREET TREES ARE REQUIRED ALONG ALL PUBLIC WAYS, NOT LESS THAN TWO PER EVERY 50 FEET OF FRONTAGE, OR PORTION THEREOF. SPECIES MUST BE FROM SECTION 4-07 OF THE SUBDIVISION REGULATIONS.**
20. **FLOOD LAMPS TO BE DIRECTED TOWARDS THE GROUND AND ALL FLOOD LAMPS TO BE FULL CUTOFF WITH RECESSED LENSES ONLY.**
21. WHENEVER CONCRETE SIDEWALKS ABUT ASPHALT, A CONCRETE CURB IS REQUIRED.
22. WATER SERVICE SIZING TO BE DETERMINED BY THE SOUTHINGTON WATER DEPARTMENT UPON RECEIPT OF ALL PERTINENT WATER FIXTURE DATA.
23. UNDERGROUND FUEL TANKS SHALL BE PROHIBITED.
24. PROPERTY SERVED BY PUBLIC WATER AND SANITARY SEWER.
TOP OF DUMPSTER SHALL NOT BE HIGHER THAN TOP OF FENCE.
25. **NO DETENTION IS REQUIRED. SEE DETENTION INFORMATION TABLE**
26. **ANY DAMAGE TO CURB OR ROADWAY TO BE RESTORED TO TOWN STANDARDS**
27. **ALL PLANTINGS WILL BE NATIVE.**

EROSION AND SEDIMENTATION CONTROL NOTES:

1. LAND DISTURBANCE SHALL BE KEPT TO A MINIMUM. RESTABILIZATION SHALL BE SCHEDULED AS SOON AS PRACTICABLE. FOR THOSE AREAS WHICH ARE LEFT EXPOSED FOR MORE THAN 30 DAYS TEMPORARY SEEDING FOR STABILIZATION SHALL BE UTILIZED. ANNUAL RYEGRASS MAY BE UTILIZED OR AN APPROVED EQUAL.
2. SLOPES SHALL BE RESTRICTED TO 2' HORIZONTAL/1' VERTICAL MAXIMUM OR FLATTER THROUGH GRADING AND/OR RETAINING WALLS.
3. DISTURBED AREAS, EXCEPT PAVED AREAS, SHALL BE LOAMED (4"MIN.) AND SEEDED OR MULCHED.
4. ALL EROSION AND SEDIMENTATION CONTROL MEASURES SHALL BE CONSTRUCTED IN ACCORDANCE WITH THE STANDARDS AND SPECIFICATIONS OF THE EROSION AND SEDIMENTATION CONTROL HANDBOOK.
5. THE APPLICATION AND SPECIFIC DETAILS OF THE EROSION AND SEDIMENTATION CONTROL SHALL FOLLOW THE CT COUNCIL ON SOIL AND WATER CONSERVATION MANUAL ENTITLED "GUIDELINES FOR SOIL EROSION AND SEDIMENT CONTROL", DATED JANUARY 1985 AS AMENDED TO DATE.
6. ALL CONTROL MEASURES SHALL BE MAINTAINED IN EFFECTIVE CONDITION THROUGHOUT THE CONSTRUCTION PERIOD.
7. ADDITIONAL CONTROL MEASURES SHALL BE INSTALLED DURING THE CONSTRUCTION PERIOD IF DEEMED NECESSARY BY THE TOWN PLANNER AND/OR THE TOWN ENGINEER.
8. SEDIMENTATION BARRIERS TO BE FIBRETEX 150 GRADE, APPROVED EQUAL, OR STAKED HAYBALES.
9. SEDIMENTATION BARRIER TO BE INSTALLED AS SHOWN ON THIS PLAN PRIOR TO ANY CONSTRUCTION. PLOT PLANS FOR INDIVIDUAL LOTS SHALL CONTAIN DETAILED DELINEATION OF SILTATION BARRIERS INCLUDING ANY ADDITIONAL EROSION CONTROLS AS DEEMED NECESSARY.
10. CONTRACTOR IS RESPONSIBLE FOR CORRECTING ANY UNFORSEEN FIELD
11. ALL CONSTRUCTION SHALL CONFORM TO THE STANDARDS OF THE MUNICIPALITY. STEVE MASOTTI OR HIS DULY AUTHORIZED AGENT (860) 637-2917 IS RESPONSIBLE FOR NOTIFYING THE MUNICIPALITIES PLANNING AND ENGINEERING DEPARTMENTS AT LEAST 24 HOURS IN ADVANCE OF START OF ANY CONSTRUCTION ACTIVITY.
STEVE MASOTTI OR HIS DULY AUTHORIZED AGENT (860) 637-2917 IS ASSIGNED THE RESPONSIBILITY FOR IMPLEMENTING THIS EROSION AND SEDIMENTATION CONTROL PLAN. THIS RESPONSIBILITY INCLUDES THE INSTALLATION AND MAINTENANCE OF CONTROL MEASURES, INFORMING ALL PARTIES ENGAGED ON THE CONSTRUCTION SITE OF THE REQUIREMENTS AND OBJECTIVES OF THE PLAN, NOTIFYING THE PLANNING AND ZONING OFFICE OF ANY TRANSFER OF THIS RESPONSIBILITY, AND FOR CONVEYING A COPY OF THE EROSION AND SEDIMENT CONTROL PLAN IF THE TITLE OF THE LAND IS TRANSFERRED.
12. SEDIMENT CONTROL: TEMPORARY PERVIOUS BARRIERS, USING HAY BALES OR SILT FENCE, HELD IN PLACE WITH WOODEN STAKES SHALL BE USED AT ALL AREAS WHERE STORM WATER CONTAINING SUSPENDED SEDIMENT COULD DRAIN OFF SITE.
13. SILT FENCE AND/OR HAY BALES TO BE INSTALLED PRIOR TO COMMENCEMENT OF CONSTRUCTION OPERATIONS. ANY DAMAGED BARRIERS SHALL BE REPLACED AND/OR RESET IMMEDIATELY FOLLOWING DAMAGE.
14. PURSUANT TO THE REGULATIONS; A LAYER OF TOPSOIL SHALL BE SPREAD OVER THE EXCAVATED AREA, LOAMED & SEEDED, 4 INCHES MINIMUM IN DEPTH IN ACCORDANCE WITH THE APPROVED CONTOUR PLAN.
15. CATCH BASIN MAINTENANCE SCHEDULE:
STRUCTURES TO BE INSPECTED SEMI-ANNUALLY. SEDIMENT TO BE EXTRACTED AS NEEDED PER INSPECTION IN THE SPRING AND FALL, AND DISPOSED OF IN AN ENVIRONMENTALLY ACCEPTABLE MANOR. THE PLANNING DEPARTMENT IS TO BE NOTIFIED AT (860) 276-2648 OF INSPECTIONS AND/OR CLEANINGS.

CONSTRUCTION SEQUENCE:

1. **AN ON-SITE JOB MEETING TO DISCUSS AND PLAN IMPLEMENTATION OF EROSION CONTROLS SHALL TAKE PLACE PRIOR TO COMMENCEMENT OF CONSTRUCTION ACTIVITY.**
2. ESTABLISH EROSION AND SEDIMENTATION CONTROL MEASURES, AS SHOWN ON PLAN PRIOR TO INITIATING ANY CONSTRUCTION ACTIVITY.
3. CALL BEFORE YOU DIG 1-800-922-4455.
4. POST APPROPRIATE BONDS.
5. REMOVE TREES AND VEGETATION TO CLEARING LIMITS SHOWN.
6. INSTALL ANTI-TRACKING PAD.
7. OBTAIN TEMPORARY POWER.
8. START MASS EARTH MOVEMENT AND SITE REDEVELOPMENT.
9. AS THE SHAPE OF THE SITE CONTINUES, START BUILDING EXCAVATION AND PLACE FOUNDATION, SLAB AND BUILDING.
10. CONSTRUCT SITE UTILITIES; PROTECT CATCH BASINS WITH STAKED HAY BALES, TRAP ANY SEDIMENT THAT ACCUMULATES DURING CONSTRUCTION.
11. FINISH GRADE AND PLACE GRAVEL BASE FOR PAVED AREAS.
12. INSTALL SITE LIGHTING AND LANDSCAPING.
13. CONSTRUCT CONCRETE WALKS AND PLACE BITUMINOUS CONCRETE.
14. FINISH GRADE SITE; SPREAD TOPSOIL AND SEED ALL AREAS DISTURBED BY CONSTRUCTION; STABILIZE ALL SLOPES.

SUGGESTED SEED MIXTURE	LBS/AC	LBS/1000 SF
KENTUCKY BLUEGRASS	20	0.45
CREEPING RED FESCUE	20	0.45
PERENNIAL RYEGRASS	5	0.10
	45	1.00

15. REMOVE SEDIMENT AND DISPOSE OF OFFSITE IN AN ENVIRONMENTALLY ACCEPTABLE MANNER.
16. REMOVE ANTI-TRACKING PAD, REPAIR ANY DAMAGE TO CURBING.
17. AFTER DISTURBED AREAS HAVE HAD VEGETATION RE-ESTABLISHED ON THEM, SILTATION BARRIERS SHALL BE REMOVED.

MAP REFERENCES:
1. "SUBDIVISION MAP, PREPARED FOR CENTRAL CONNECTICUT CONTRACTORS, LLC; CAPTAIN LEWIS DRIVE AND TOWNLINE ROAD SOUTHINGTON, CONNECTICUT; SCALE: 1"=40'; OCTOBER 8, 2007, LAST REVISED JANUARY 31, 2008 BY STEPHEN M. GUDICE L.S. #70145.
2. SITE DEVELOPMENT PLAN, LOT #10 INDUSTRIAL DRIVE SOUTHINGTON, CONNECTICUT; PREPARED FOR MASOTTI ELECTRIC; #120 INDUSTRIAL DRIVE SOUTHINGTON, CONNECTICUT; SCALE: 1"=20'; DATE: APRIL 30, 2009 LAST REVISED MAY 26, 2009;BY HARRY COLE & SON; PROJECT #0578.010 F.B. #434; SHEET #C2.1

ZONING TABLE

ZONE – I-1 (INDUSTRIAL) SEWER AND WATER SERVICE AVAILABLE

	REQUIRED	PROPOSED (PARCEL A)
LOT AREA	20,000 SF	44,715 SF
LOT COVERAGE	35%	22.3%
FRONT YARD SETBACK	40'	78.4'
SIDE YARD SETBACK	15'	16.6'
REAR YARD SETBACK	20'	45'

PARKING REQUIREMENTS:
EXISTING BUILDING: 5,184 S.F.
PROPOSED BUILDING: 4,800 S.F.
TOTAL : 9,984 S.F.
1 SPACE FOR EACH 500 S.F. OF GROSS FLOOR AREA
9,984/500 = 19.96 = 20 SPACES
REQUIRED PARKING = 20 SPACES
PROPOSED PARKING = 1 H.C. + 19 STANDARD = 20 SPACES
REQUIRED HANDICAPPED PARKING = 1 SPACE
PROVIDED HANDICAPPED PARKING = 1 SPACE

OPEN SPACE

12-02.05: ALL PARKING LOTS SHALL CONTAIN LANDSCAPED AREA IN THE RATIO OF NOT LESS THAN 20 SQUARE FEET FOR EACH PARKING SPACE.
NUMBER OF PARKING SPACES = 20
REQUIRED LANDSCAPED AREA = 400 S.F.
LANDSCAPED AREA ON SITE = 576+ S.F.

DETENTION INFORMATION TABLE

REQUIRED: IMPERVIOUS AREA (BUILDING & PARKING) MAX. 75% OF TOTAL LOT AREA
ALLOWED AREA ON SITE = 0.77 Ac. (75%)
EXISTING IMPERVIOUS AREA = 0.39 Ac (38%)
PROPOSED IMPERVIOUS AREA = 0.24 Ac (23%)
TOTAL IMPERVIOUS AREA = 0.63 Ac (61%)
NO DETENTION REQUIRED WITH PROPOSED SITE

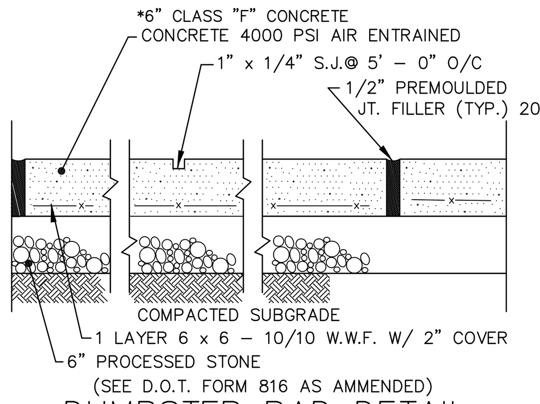

DUMPSTER PAD DETAIL
N.T.S.

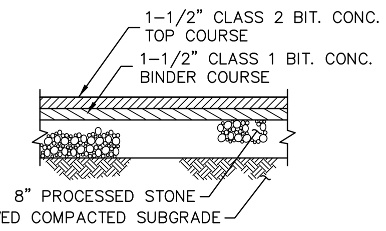

MINIMUM PAVEMENT SECTION
(FOR INTERIOR DRIVEWAYS AND PARKING IN SITE)
N.T.S.
(SEE D.O.T. FORM 816 AS AMENDED)

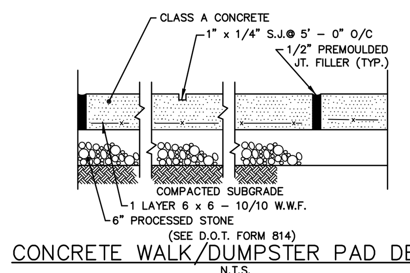

CONCRETE WALK/DUMPSTER PAD DETAIL
N.T.S.

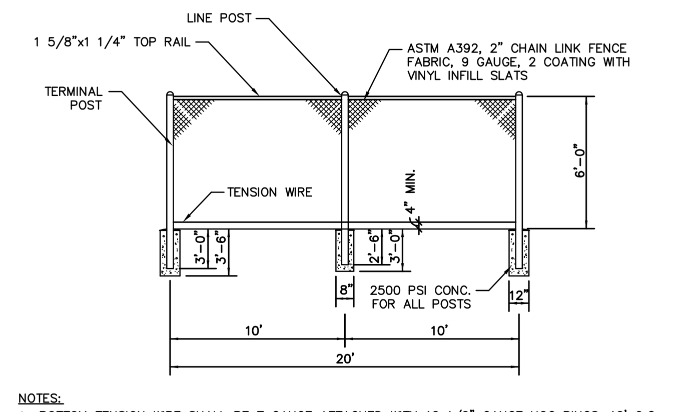

NOTES:
1. BOTTOM TENSION WIRE SHALL BE 7 GAUGE ATTACHED WITH 12 1/2" GAUGE HOG RINGS, 12' O.C.
2. TOP RAIL COUPLINGS TO BE SPACED EVERY 20'. EXPANSION COUPLINGS TO BE AT 100' INTERVALS.
3. TOP RAIL WIRE TIES SHALL BE SPACED 24" MAX.
4. FENCE SHALL CONFORM WITH CT D.O.T. STANDARDS, INCLUDING LATEST REVISIONS.
5. PROVIDE CHAINLINK SWING GATES AND MANDOORS AS SHOWN ON SITE PLAN.

CHAIN LINK FENCE & DUMPSTER ENCLOSURE
N.T.S.

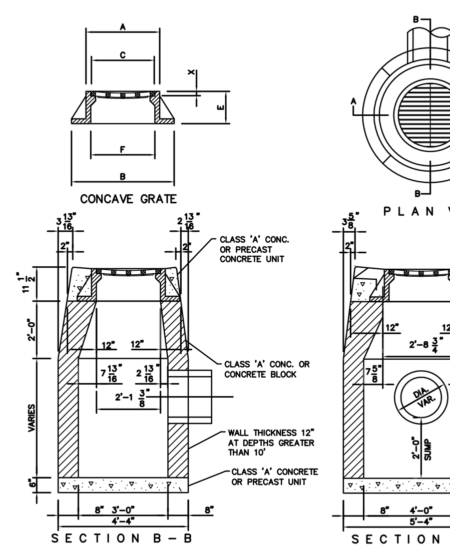

CONCRETE YARD DRAIN DETAIL
N.T.S.

KEY MAP: 1"=1000'

NOTES:
1. ALL MATERIAL TO MEET FILTREXX™ SPECIFICATIONS.
2. SECURE FILTERSOCK TO GROUND AT EACH END.
SOCK OPTION:

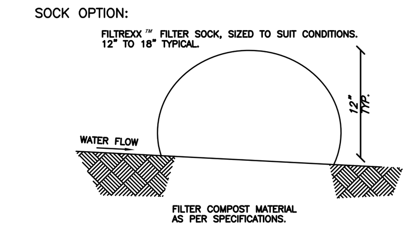

SILT SOXX DETAIL
NTS

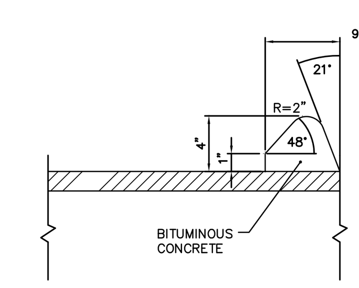

BITUMINOUS CONCRETE PARK CURBING
N.T.S.

REVISIONS TO THESE PLANS BY ANYONE OTHER THAN KJA SHALL MAKE THESE PLANS NULL AND VOID. KJA SHALL TAKE NO RESPONSIBILITY FOR SAID REVISIONS.

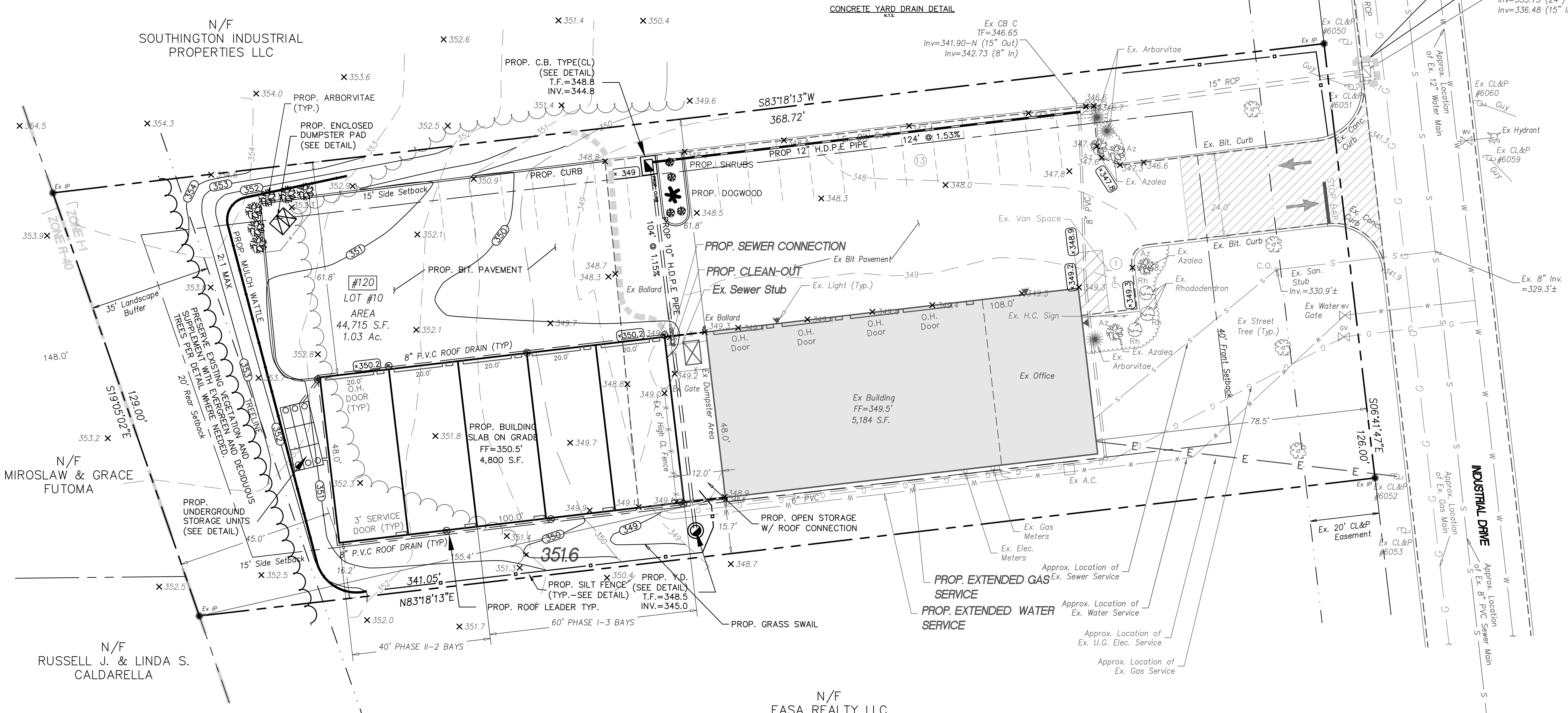

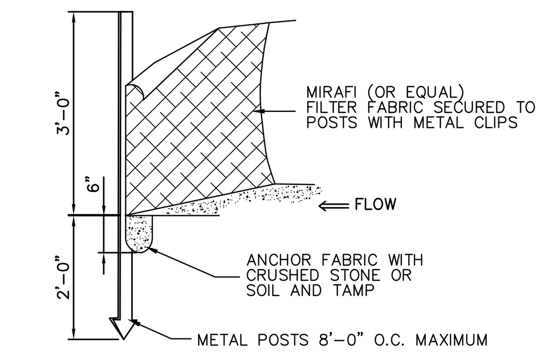

SILT FENCE DETAIL
N.T.S.

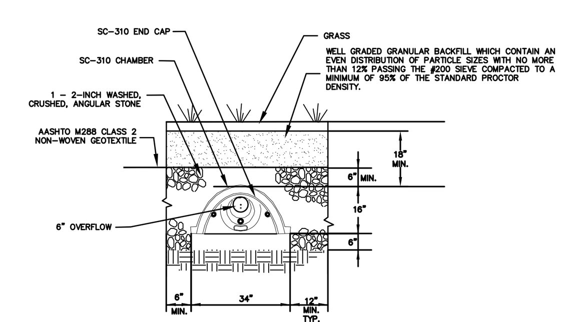

STORMTECH SC-310 CHAMBER SYSTEM
TYPICAL CROSS SECTION DETAIL
N.T.S.

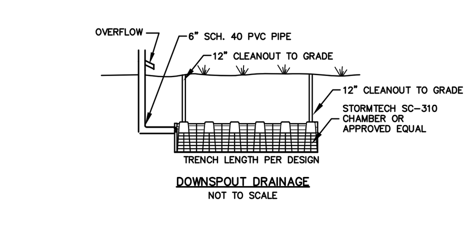

DOWNSPOUT DRAINAGE
NOT TO SCALE

Disclaimer:
The underground utilities shown have been located from limited field survey information and existing drawings. The surveyor makes no guarantee that the underground utilities shown comprise all such utilities in the area either in service or abandoned. To meet the requirements of our professional liability insurance, the terms CERTIFICATE, CERTIFY, AND CERTIFICATION mean to the best information, knowledge, and belief of the engineer; and are not an unconditional certification, warranty or guarantee which are not covered under the policy.

LANDSCAPE NOTES

1. ALL PLANTS SHALL BE OF FIRST CLASS QUALITY AND SHALL MEET THE REQUIREMENTS OF THE PLANT LIST. PLANTS SHALL BE SUBJECT TO INSPECTION AND REJECTION BY THE OWNER AND/OR LANDSCAPE ARCHITECT. NO SUBSTITUTIONS SHALL BE ALLOWED UNLESS APPROVED.
2. SHRUBS SHALL BE SET IN BEDS WITH TOPSOIL 12" BELOW AND AROUND EACH SHRUB. SET SHRUBS UPRIGHT IN CENTER OF EACH PIT AND AT A DEPTH SO THAT THE FINISHED GRADE IS LEVEL AT THE PLANT. AFTER SETTLEMENT THE GRADE WILL BE THE SAME AS THE GENERAL LEVEL OF THE PLANT BED AND AT THE HEIGHT AS WHEN GROWING. WATER, BACKFILL, PUDDLE AND TAMP IN THE ACCEPTED APPROVED MANNER TO COMPLETE PLANTING. SHAPE AND PRUNE OUT ALL DEAD TWIGS.
3. INSTALL SHREDDED BARK MULCH AND STONE MULCH TO DEPTH OF 3". STONE MULCH TO BE USED IN ALL ISLANDS. MULCH TO BE APPROVED BEFORE INSTALLATION.
4. BARE AND DISTURBED AREAS SHALL BE SEEDED, IF NOT NOTED FOR TURF. PREPARE, SCARIFY AND APPLY SEED IN APPROVED MANNER.

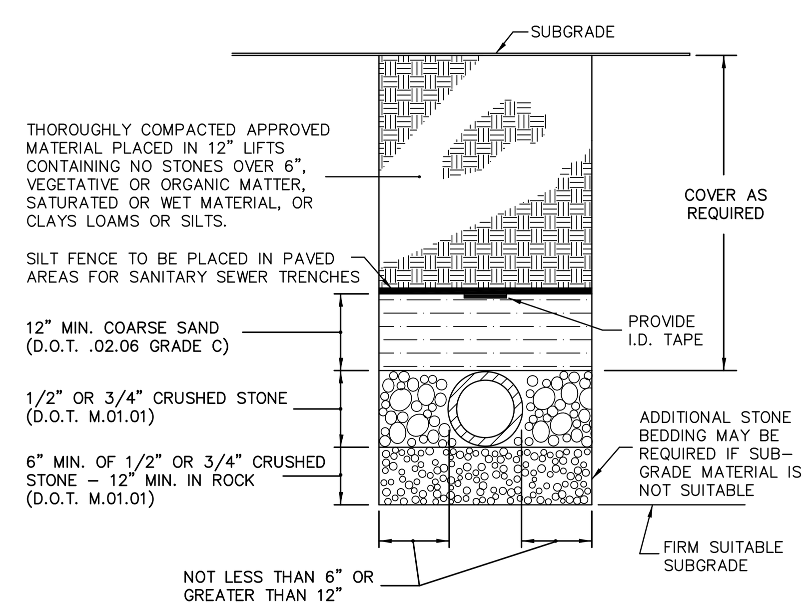

TYPICAL TRENCH FOR ALL UTILITIES
N.T.S.

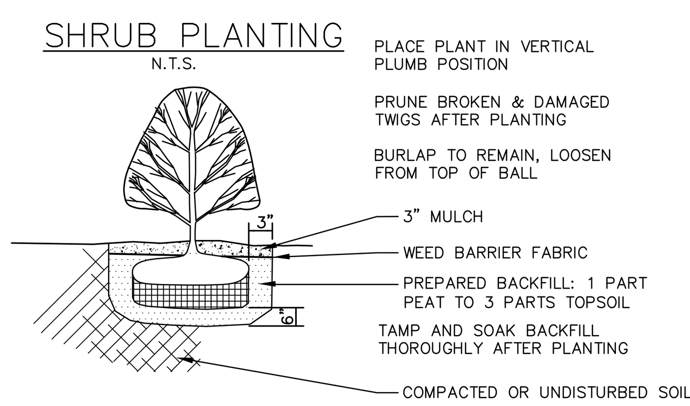

SHRUB PLANTING
N.T.S.

PLANTING LIST

SYMBOL	QUAN.	NAME	SIZE
(symbol)	6	ARBORVITAE	4'-5'
*	1	DOGWOOD	6'-7'
(symbol)	4	AZALEA	12"-15"

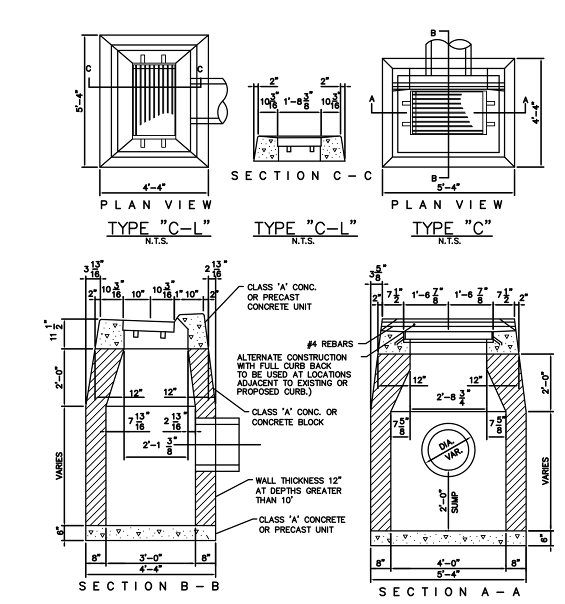

CATCH BASIN DETAIL
N.T.S.

LEGEND

SYMBOL	DESCRIPTION
	PROPERTY LINE
○	IRON PIN TO BE SET
● Ex IP	EXISTING IRON PIN
⊡	MONUMENT TO BE SET
■	EXISTING MONUMENT
Ⓢ	EXISTING SANITARY MANHOLE
Ⓓ	EXISTING STORM MANHOLE
□	EXISTING CATCH BASIN
☼	EXISTING LIGHT
	EXISTING HYDRANT
GV	EXISTING GAS VALVE
WV	EXISTING WATER VALVE
	EXISTING UTILITY POLE
	EX. EDGE OF ROAD
	EX. EDGE OF ROAD (CURBED)
	EX. EDGE OF DRIVEWAY
—S—	EX. SANITARY SEWER LINE
—W—	EX. WATER LINE
	EX. GUIDE RAIL

REVISION-7:	
REVISION-6:	
REVISION-5:	
REVISION-4:	
REVISION-3:	
REVISION-2:	
REVISION-1:	08.20.2021 SITE PLAN REVISION
PROJECT: 213094-MASOTTI	
DB:MPT	SR:AQ	DR:SB

SEAL:

SURVEY NOTES:
THIS MAP HAS BEEN PREPARED IN ACCORDANCE WITH THE "MINIMUM STANDARDS FOR SURVEYS AND MAPS IN THE STATE OF CONNECTICUT" AS ADOPTED FOR USE BY THE REGULATIONS OF CONNECTICUT STATE AGENCIES ON SEPTEMBER 26, 1996. (CT SECTIONS 20-300b-1 TO 20-300b-20).

THE TYPE OF SURVEY PERFORMED IS AN: IMPROVEMENT LOCATION MAP.

BOUNDARY DETERMINATION IS BASED UPON: A DEPENDENT RESURVEY.

THIS SURVEY CONFORMS TO A: CLASS A-2

TO THE BEST OF MY KNOWLEDGE AND BELIEF THIS MAP IS SUBSTANTIALLY CORRECT AS NOTED HEREON.

James N. Sakonchick
CT P.E. & L.S. #11302

kratzert, jones & associates, inc.
CIVIL ENGINEERS • LAND SURVEYORS
SITE PLANNERS • BUILDING ENGINEERS
P.O. BOX 337
1755 MERIDEN-WATERBURY RD.
MILLDALE, CT 06467-0337
PHONE: (860) 621-3638
FAX: (860) 621-9609
EMAIL: INFO@KRATZERTJONES.COM

MODIFICATION OF SITE PLAN

for

MASOTTI ELECTRIC

#120 INDUSTRIAL DRIVE
SOUTHINGTON, CT

SCALE: 1" = 20'

DATE: NOVEMBER 25, 2013

HALF | ONE INCH | TWO INCH
INCHES ON ORIGINAL

KJA FILE NO.: 213-094

DRAWING NO.: PL-1

M:\13\213094-MASOTTI\dwg\ASBUILT 9.16.21.dwg
LAYOUT: SITE PLAN MOD DATE: Sep 16, 2021 - 3:44pm