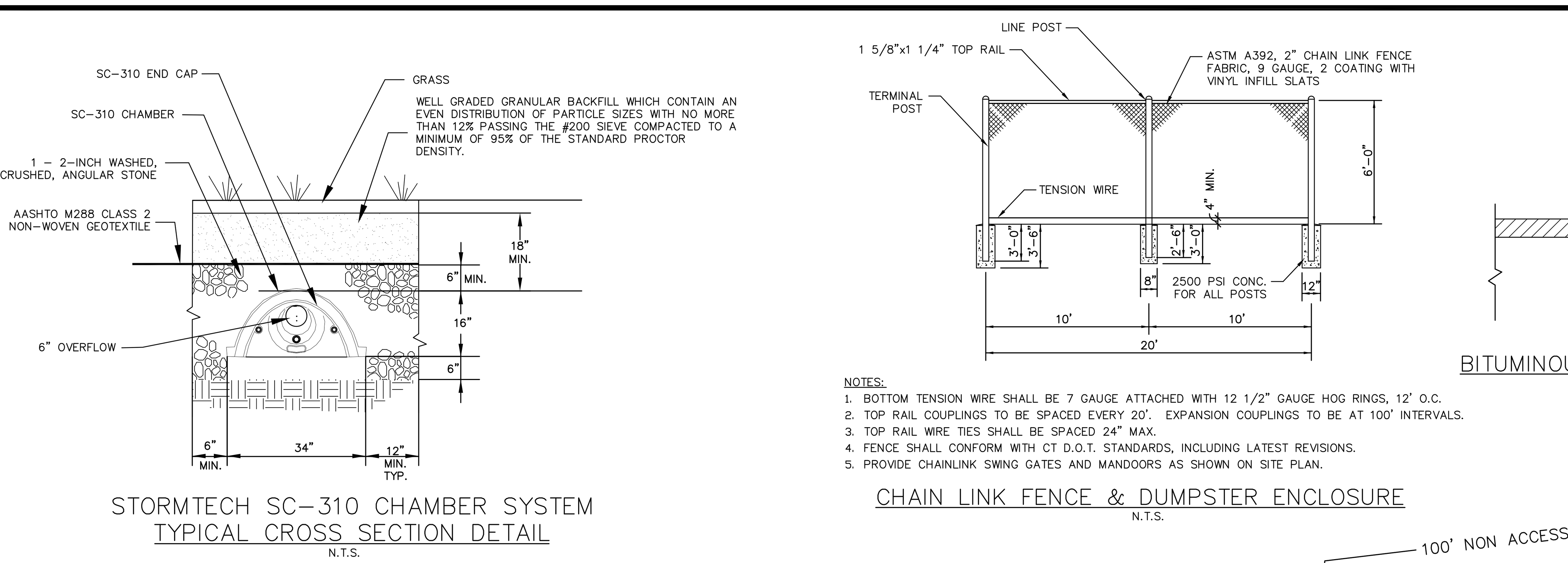

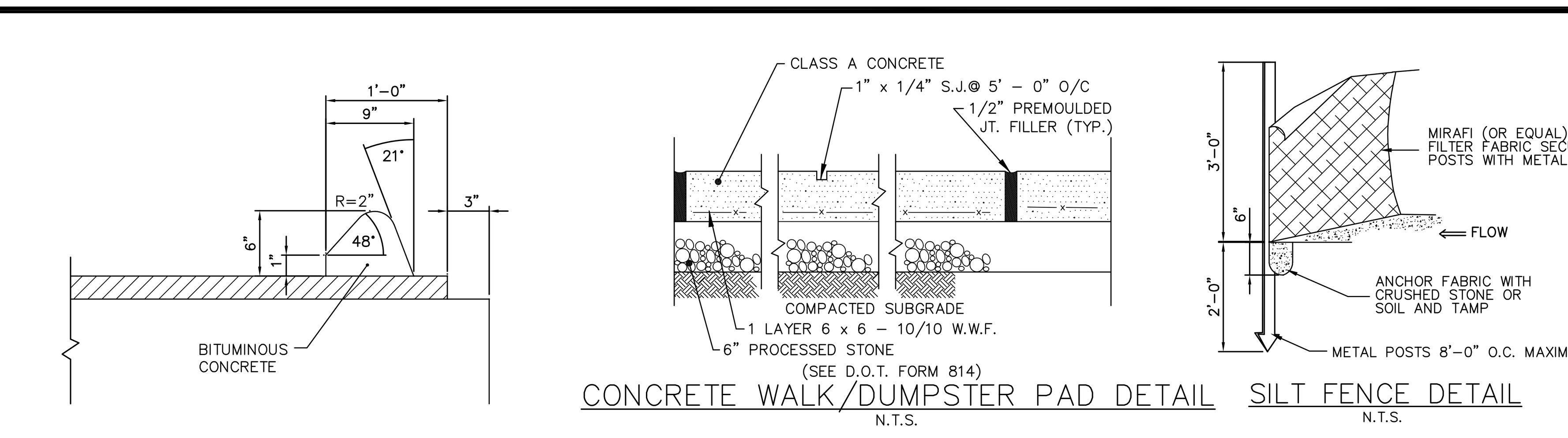

Utilities Disclaimer:
The underground utilities shown have been located from field survey information and existing drawings. The surveyor makes no guarantee that the underground utilities shown comprise all such utilities in the area either in service or abandoned. The surveyor further does not warrant that the underground utilities shown are in the exact location indicated although he does declare that they are located as accurately as possible from information available. The surveyor has not physically located the underground utilities.

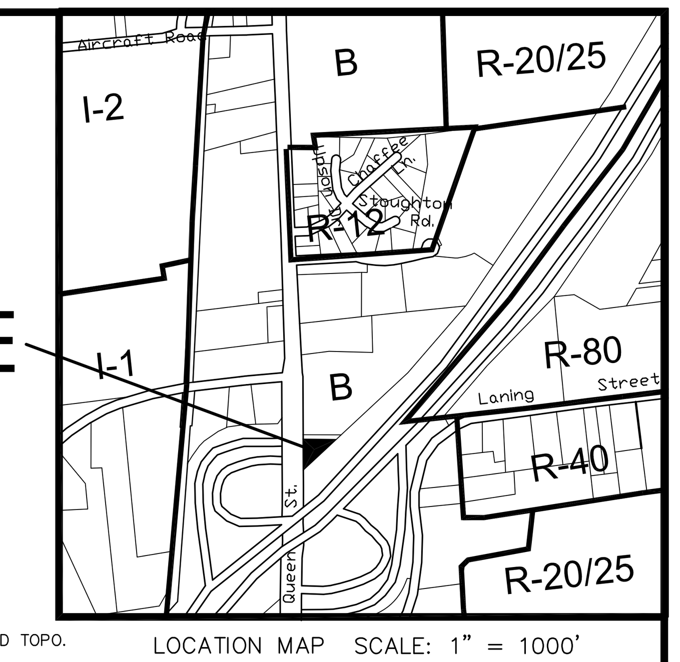

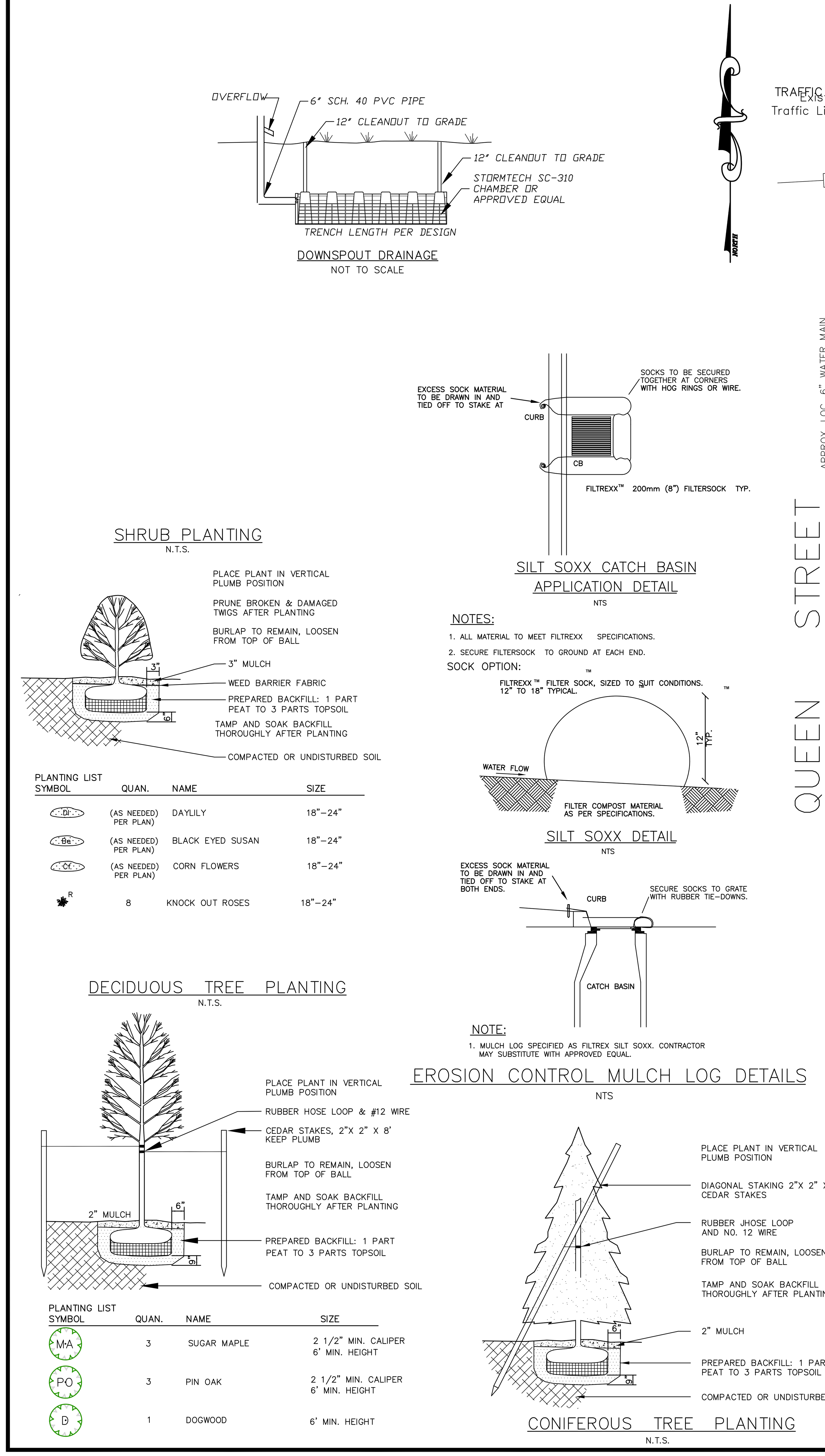

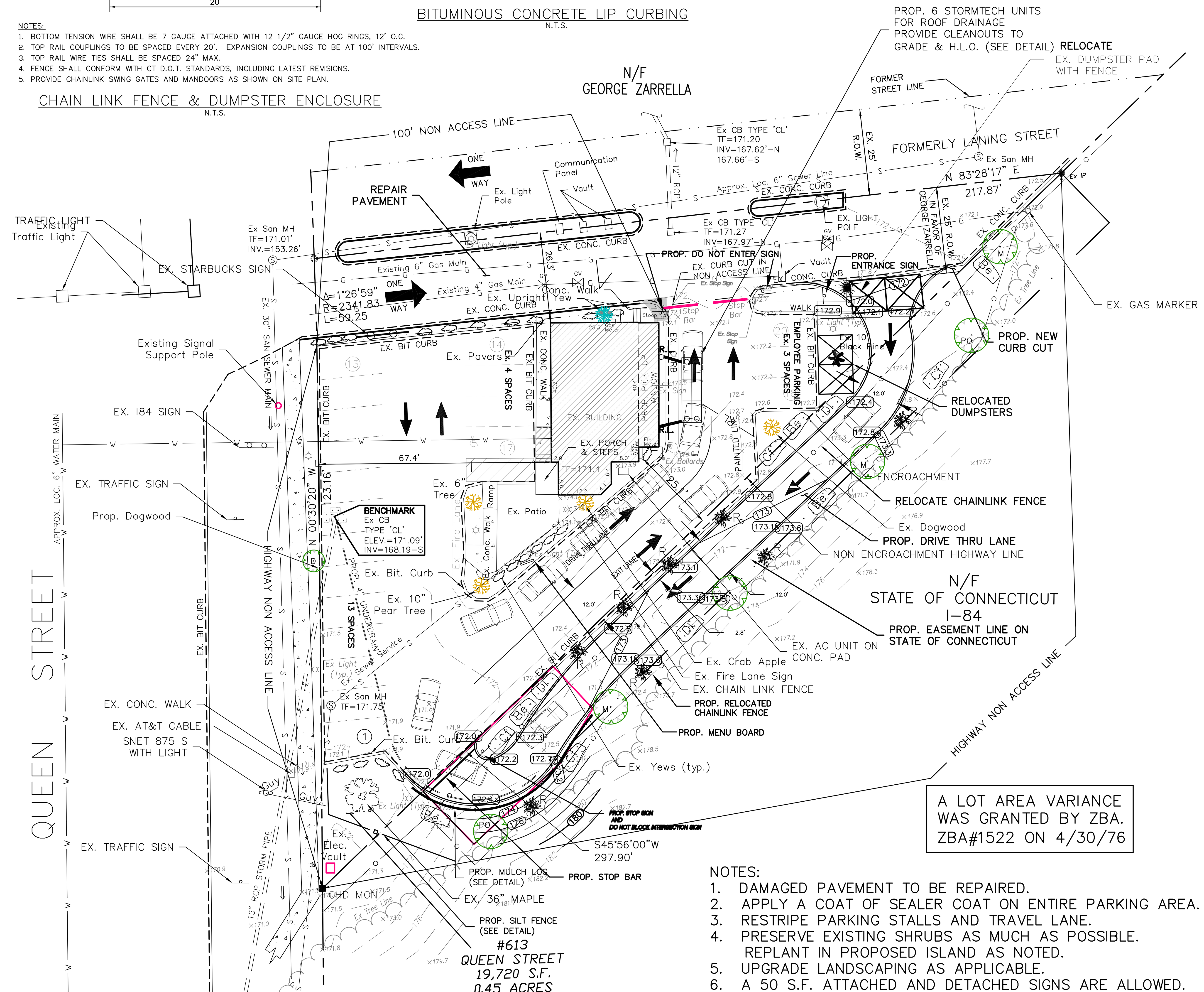

NOTES:
1. DAMAGED PAVEMENT TO BE REPAIRED.
2. APPLY A COAT OF SEALER COAT ON ENTIRE PARKING AREA.
3. RESTRIPE PARKING STALLS AND TRAVEL LANE.
4. PRESERVE EXISTING SHRUBS AS MUCH AS POSSIBLE. REPLANT IN PROPOSED ISLAND AS NOTED.
5. UPGRADE LANDSCAPING AS APPLICABLE.
6. A 50 S.F. ATTACHED AND DETACHED SIGNS ARE ALLOWED.
7. BASEMENT TO BE USED FOR STORAGE.
8. BROKEN SHUTOFF VALVE TO BE REPAIRED BY OWNER.

LEGEND

- PROPERTY LINE
- PROPERTY CORNER
- EXISTING IRON PIN
- PROPOSED MONUMENT
- EXISTING MONUMENT
- EXIST. EDGE OF ROAD

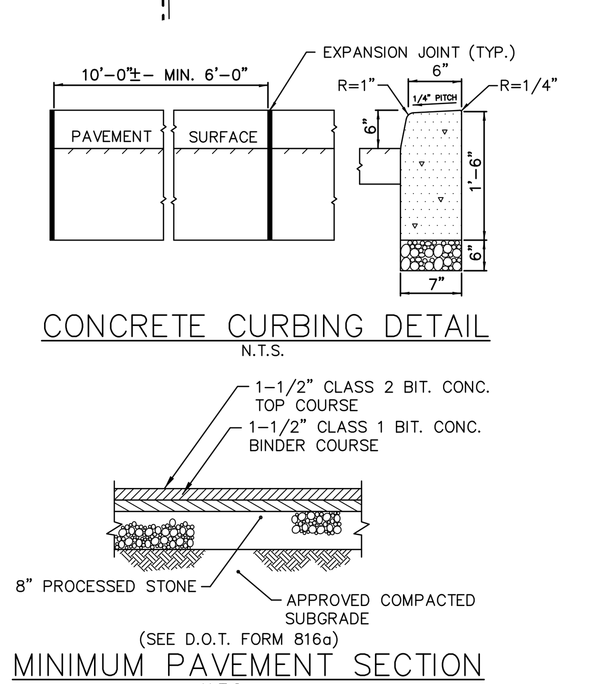

OPEN SPACE
12-02.05: ALL PARKING LOTS SHALL CONTAIN LANDSCAPED AREA IN THE RATIO OF NOT LESS THAN 20 SQUARE FEET FOR EACH PARKING SPACE.
NUMBER OF PARKING SPACES = 20
REQUIRED LANDSCAPED AREA = 400 S.F.
LANDSCAPED AREA ON SITE = 800 S.F.

ZONING TABLE

ZONE – (B) BUSINESS

	REQUIRED	EXISTING
LOT AREA	20,000 S.F.	19,716 S.F. (NON CONFORMING)
LOT COVERAGE	25%	7%
FRONT YARD SETBACK	40'	67.4'
SIDE YARD SETBACK	10'	25.1'
LOT FRONTAGE	100'	182.43'

PARKING REQUIRMENTS: 1 SPACE PER 2 SEATS
SEATS IN RESTAURANT AND PATIO: 40
REQUIRED PARKING: 40 SEATS/2 = 20 SPACES
PARKING PROVIDED: 20 SPACES INCLUDING 1 H.C. SPACE
REQUIRED H.C. SPACES = 1, PROVIDED H.C. SPACES =1

MAP REFERENCES:

1. Map of property of
Countywide Construction Co.
Queen St., Southington, CT
Scale: 1" = 20' Dated: August 9, 1979
Kratzert & Jones
Civil Engineers–Land Surveyors – Site Planners
Meriden–Waterbury Turnpike, Milldale, CT.

2. Site Plan for
Countywide Construction Co.
Queen Street, Southington, CT.
Scale: 1" = 20' Dated: August 9, 1979
Kratzert & Jones
Civil Engineers–Land Surveyors–Site Planners
Meriden–Waterbury Turnpike, Milldale, Ct.

3. Connecticut State Highway Department
Right of Way Map – Town of Southington
North Main & Queen St. from Chapman St. Northerly
About 11,770 feet Route No. 10.
Scale: 1" = 40' Dated: July 31, 1940
Number 131–11 Sheet 4 of 5

STANDARD SITE PLAN NOTES:
1. PARCEL OWNER: QUEEN STREET GROUP
PARCEL ADDRESS: #613 QUEEN STREET
2. CONTOUR INTERVAL = 2 FT
3. ELEVATIONS BASED ON U.S.C. & G.S. DATUM.
4. TOPOGRAPHY IS FROM TOWN TOPOGRAPHY, AUGMENTED BY FIELD TOPO.
5. THE INDICATED EXISTING UTILITIES ARE BASED ON LIMITED INFORMATION. THE LOCATIONS ARE APPROXIMATE AND NOT GUARANTEED. ALL UTILITIES MAY NOT BE SHOWN. PRIOR TO ANY EXCAVATION, CONTRACTOR TO NOTIFY "CALL BEFORE YOU DIG" AT 1-800-922-4455.
6. CONTRACTOR REQUIRED TO FIELD VERIFY ALL DIMENSIONS, ELEVATIONS, QUANTITIES AND DETAILS PRIOR TO ANY CONSTRUCTION.
7. LOT AREA = 19,720 s.f. OR 0.45 acres.
8. PROPERTY IS LOCATED IN ZONE B.
9. ALL CONSTRUCTION SHALL CONFORM TO CONN. DOT 816A. (AS AMENDED)
10. GROUNDWATER ZONE IS GA.
11. PARKING REQUIREMENTS: SEE ZONING TABLE
12. PROPERTY IS SERVED BY PUBLIC WATER AND SANITARY SEWER.
13. FLOOD LAMPS TO BE SHIELDED SO AS NOT TO ALLOW ILLUMINATION TO EMIT BEYOND PROPERTY.
14. LOT COVERAGE = 7% (ALLOWED = 25%)
15. PRESENT LAND USE: RESTAURANT / COFFEE SHOP
PROPOSED LAND USE: RESTAURANT / COFFEE SHOP
16. ALL CATCH BASINS TO BE C.H.D. TYPE 'C' UNLESS OTHERWISE NOTED. ALL CB'S SHALL HAVE A 2' DEEP (MIN.) SUMP.
17. ALL STORM DRAINAGE PIPE TO BE CLASS IV R.C.P. UNLESS OTHERWISE NOTED.
18. ALL SANITARY SEWER PIPE TO CONFORM TO LOCAL BUILDING AND/OR ENGINEERING SPECIFICATIONS.
19. ALL PIPE SLOPES ARE DELINEATED IN FT/FT UNITS.
20. PLANNING AND ENGINEERING DEPARTMENTS TO BE NOTIFIED AT 276-6248 AND 276-6231, 24 HOURS IN ADVANCE OF ANY CONSTRUCTION ACTIVITY.
21. ANY REGULATED ACTIVITY IN A DESIGNATED INLAND WETLAND AREA NOT A PART OF THIS PLAN SHALL REQUIRE A SEPARATE INLAND WETLAND PERMIT.
22. ALL ROOF DRAINS TO BE CONNECTED TO CATCH BASINS AS SHOWN.
23. UNDERGROUND FUEL TANKS SHALL BE PROHIBITED.
24. ALL WORK IN CONNECTION WITH THIS PLAN SHALL BE COMPLETED WITHIN FIVE YEARS OF THE DATE OF APPROVAL, OR THE APPROVAL IS NO LONGER VALID.
25. NO CERTIFICATE OF OCCUPANCY SHALL BE ISSUED UNTIL ALL SITE WORK IS COMPLETED, OR WHEN SPECIFICALLY APPROVED BY THE PLANNING AND ZONING COMMISSION. A TEMPORARY C.O. MAY BE ISSUED UPON THE POSTING OF A BOND.
26. THE APPLICANT SHALL BE RESPONSIBLE FOR OBTAINING THE NECESSARY STATE AND FEDERAL ENVIRONMENTAL PERMITS.
27. TOTAL BUILDING SQUARE FOOTAGE IS 1,379 S.F.
28. WATER SERVICE SIZING TO BE DETERMINED BY THE SOUTHINGTON WATER DEPARTMENT UPON RECEIPT OF ALL PERTINENT WATER FIXTURE DATA.
29. FLOOD LAMPS TO BE DIRECTED TOWARDS THE GROUND AND ALL FLOOD LAMPS TO BE FULL CUTOFF WITH RECESSED LENSES ONLY.
30. STREET TREES ARE REQUIRED ALONG ALL PUBLIC WAYS, NOT LESS THAN TWO PER EVERY 50 FEET OF FRONTAGE, OR PORTION THEREOF. SPECIES MUST BE FROM SECTION 4-07 OF THE SUBDIVISION REGULATIONS.
31. ALL PLANTINGS WILL BE NATIVE.

SUBDIVISION EROSION AND SEDIMENTATION CONTROL NOTES:
1. LAND DISTURBANCE SHALL BE KEPT TO A MINIMUM. RESTABILIZATION SHALL BE SCHEDULED AS SOON AS PRACTICABLE. FOR THOSE AREAS WHICH ARE LEFT EXPOSED FOR MORE THAN 30 DAYS TEMPORARY SEEDING FOR STABILIZATION SHALL BE UTILIZED. ANNUAL RYEGRASS MAY BE UTILIZED OR AN APPROVED EQUAL.
2. SLOPES SHALL BE RESTRICTED TO 2' HORIZONTAL/1' VERTICAL MAXIMUM OR FLATTER THROUGH GRADING AND/OR RETAINING WALLS.
3. DISTURBED AREAS, EXCEPT PAVED AREAS, SHALL BE LOAMED (4"MIN.) AND SEEDED OR MULCHED.
4. ALL EROSION AND SEDIMENTATION CONTROL MEASURES SHALL BE CONSTRUCTED IN ACCORDANCE WITH THE STANDARDS AND SPECIFICATIONS OF THE EROSION AND SEDIMENTATION CONTROL HANDBOOK.
5. THE APPLICATION AND SPECIFIC DETAILS OF THE EROSION AND SEDIMENTATION CONTROL SHALL FOLLOW THE CT COUNCIL ON SOIL AND WATER CONSERVATION MANUAL ENTITLED "GUIDELINES FOR SOIL EROSION AND SEDIMENT CONTROL", DATED JANUARY 1985 AS AMENDED TO DATE.
6. ALL CONTROL MEASURES SHALL BE MAINTAINED IN EFFECTIVE CONDITION THROUGHOUT THE CONSTRUCTION PERIOD.
7. ADDITIONAL CONTROL MEASURES SHALL BE INSTALLED DURING THE CONSTRUCTION PERIOD IF DEEMED NECESSARY BY THE TOWN PLANNER AND/OR THE TOWN ENGINEER.
8. SEDIMENTATION BARRIERS TO BE FIBRETEX 150 GRADE, APPROVED EQUAL, OR STAKED HAYBALES.
9. SEDIMENTATION BARRIER TO BE INSTALLED AS SHOWN ON THIS PLAN PRIOR TO ANY CONSTRUCTION. PLOT PLANS FOR INDIVIDUAL LOTS SHALL CONTAIN DETAILED DELINEATION OF SILTATION BARRIERS INCLUDING ANY ADDITIONAL EROSION CONTROLS AS DEEMED NECESSARY.
10. CONTRACTOR IS RESPONSIBLE FOR CORRECTING ANY UNFORSEEN FIELD CONDITIONS.
11. ALL CONSTRUCTION SHALL CONFORM TO THE STANDARDS OF THE MUNICIPALITY.
12. DAVID DECROCE OR HIS DULY AUTHORIZED AGENT (860) 620-4962 IS RESPONSIBLE FOR NOTIFYING THE MUNICIPALITIES PLANNING AND ENGINEERING DEPARTMENTS AT LEAST 24 HOURS IN ADVANCE OF START OF ANY CONSTRUCTION ACTIVITY.
13. DAVID DECROCE OR HIS DULY AUTHORIZED AGENT (860) 620-4962 IS ASSIGNED THE RESPONSIBILITY FOR IMPLEMENTING THIS EROSION AND SEDIMENTATION CONTROL PLAN. THIS RESPONSIBILITY INCLUDES THE INSTALLATION AND MAINTENANCE OF CONTROL MEASURES, INFORMING ALL PARTIES ENGAGED ON THE CONSTRUCTION SITE OF THE REQUIREMENTS AND OBJECTIVES OF THE PLAN, NOTIFYING THE PLANNING AND ZONING OFFICE OF ANY TRANSFER OF THIS RESPONSIBILITY, AND FOR CONVEYING A COPY OF THE EROSION AND SEDIMENT CONTROL PLAN IF THE TITLE OF THE LAND IS TRANSFERRED.
14. SEDIMENT CONTROL: TEMPORARY PERVIOUS BARRIERS, USING STRAW BALES OR SILT FENCE, HELD IN PLACE WITH WOODEN STAKES SHALL BE USED AT ALL AREAS WHERE STORM WATER CONTAINING SUSPENDED SEDIMENT COULD DRAIN OFF SITE.
15. SILT FENCE AND/OR STRAW BALES TO BE INSTALLED PRIOR TO COMMENCMENT OF CONSTRUCTION OPERATIONS. ANY DAMAGED BARRIERS SHALL BE REPLACED AND/OR RESET IMMEDIATELY FOLLOWING DAMAGE.
16. PURSUANT TO THE REGULATIONS; A LAYER OF TOPSOIL SHALL BE SPREAD OVER THE EXCAVATED AREA, LOAMED & SEEDED, 4 INCHES MINIMUM IN DEPTH IN ACCORDANCE WITH THE APPROVED CONTOUR PLAN.
17. CATCH BASIN MAINTENANCE SCHEDULE:
SEDIMENT TO BE EXTRACTED FROM SUMP(S) BI-YEARLY IN THE SPRING AND FALL AND DISPOSED OF IN AN ENVIRONMENTALLY ACCEPTABLE MANNER.
18. IF OVER 5 ACRES ARE TO BE DISTURBED AT ONE TIME, THE SITE CONTRACTOR SHALL OBTAIN A NPDES STORMWATER PERMIT.

CONSTRUCTION SEQUENCE:
1. PURSUANT TO THE EROSION SEDIMENTATION CONTROL PLAN, NOTIFY THE MUNICIPALITIES PLANNING AND ENGINEERING DEPARTMENTS OF ENSUING CONSTRUCTION ACTIVITY.
2. ESTABLISH EROSION AND SEDIMENTATION CONTROL MEASURES, AS SHOWN ON PLAN PRIOR TO INITIATING ANY CONSTRUCTION ACTIVITY.
3. CALL BEFORE YOU DIG 1-800-922-4455.
4. CLEAR AND GRUB SITE, TREES AND STUMPS SHALL BE DISPOSED OF IN AN APPROVED MANNER. DEVELOP CONSTRUCTION ENTRANCE.
5. STRIP AND STOCKPILE TOPSOIL; ANCHOR WITH STRAW MULCH AND SILT FENCE. IF STOCKPILES ARE TO BE LEFT IN PLACE FOR MORE THAN 45 DAYS, THEY SHOULD BE SEEDED WITH ANNUAL RYEGRASS AT A RATE OF 40 LBS/ACRE.
6. START MASS EARTH MOVEMENT AND SITE REDEVELOPMENT.
7. AS THE SHAPE OF THE SITE CONTINUES, START BUILDING EXCAVATION AND PLACE FOUNDATION, SLAB AND BUILDING.
8. CONSTRUCT SITE UTILITIES; PROTECT CATCH BASINS WITH STAKED HAY BALES, TRAP ANY SEDIMENT THAT ACCUMULATES DURING CONSTRUCTION.
9. PLACE AND GRADE BANKS; PROVIDE SLOPE STABILIZATION AT 2:1 BANKS.
10. FINISH GRADE AND PLACE GRAVEL BASE FOR PAVED AREAS.
11. CONSTRUCT CONCRETE WALKS AND PLACE BITUMINOUS CONCRETE.
12. FINISH GRADE SITE; SPREAD TOPSOIL AND SEED ALL AREAS DISTURBED BY CONSTRUCTION; STABILIZE ALL SLOPES.

SUGGESTED SEED MIXTURE	LBS/AC	LBS/1000 SF
KENTUCKY BLUEGRASS	20	0.45
CREEPING RED FESCUE	20	0.45
PERENNIAL RYEGRASS	5	0.10
	45	1.00

13. REMOVE SEDIMENT AND DISPOSE OF OFFSITE IN AN ENVIRONMENTALLY ACCEPTABLE MANNER.
14. REMOVE ANTI-TRACKING PAD, REPAIR ANY DAMAGE TO CURBING.
15. AFTER DISTURBED AREAS HAVE HAD VEGETATION RE-ESTABLISHED ON THEM, SILTATION BARRIERS SHALL BE REMOVED.

M:\202\SPL\DECROSE-202496-613QUEE-SO\dwg\SITE-PLAN REV 2021-09.16.2021.dwg
LAYOUT: 36Wx24H SITE PLAN DATE: Sep 16, 2021 – 3:06pm

REVISIONS TO THESE PLANS BY ANYONE OTHER THAN KJA SHALL MAKE THESE PLANS NULL AND VOID. KJA SHALL TAKE NO RESPONSIBILITY FOR SAID REVISIONS.

REVISION:
REVISION:
REVISION: 4/19/21 – DRIVE THRU
REVISION: 5/26/05 PZC & ENG. COMMENTS
PROJECT: 202\SPL\DECROSE-202496-613QUEE
DRAWN BY: MBR
SEAL:

SURVEY NOTES:
THIS MAP HAS BEEN PREPARED IN ACCORDANCE WITH THE "MINIMUM STANDARDS FOR SURVEYS AND MAPS IN THE STATE OF CONNECTICUT" AS ADOPTED FOR USE BY THE REGULATIONS OF CONNECTICUT STATE AGENCIES ON SEPTEMBER 26, 1996. (CT SECTIONS 20-300b-1 TO 20-300b-20).

THE TYPE OF SURVEY PERFORMED IS AN: IMPROVEMENT LOCATION MAP.

BOUNDARY DETERMINATION IS BASED UPON: A DEPENDENT RESURVEY.

THIS SURVEY CONFORMS TO A: CLASS A-2/T-2

TO THE BEST OF MY KNOWLEDGE AND BELIEF THIS MAP IS SUBSTANTIALLY CORRECT AS NOTED HEREON.

James N. Sakonchick
CT P.E. & L.S. #11302

kratzert, jones & associates, inc.
CIVIL ENGINEERS • LAND SURVEYORS
SITE PLANNERS • BUILDING ENGINEERS
P.O. BOX 337
1755 MERIDEN–WATERBURY RD.
MILLDALE, CT 06467–0337
PHONE: (860) 621–3638
FAX: (860) 621–9609
EMAIL: KJA5@AOL.COM

MODIFICATION OF SITE PLAN

for

QUEEN STREET GROUP

SHOWING DRIVE THRU STARBUCKS COFFEE

613 QUEEN STREET
SOUTHINGTON, CT

SCALE: 1" = 20'

DATE: APRIL 22, 2005

HALF ONE INCH TWO INCH
INCHES ON ORIGINAL

KJA FILE NO. : 23-69

DRAWING NO. : G-1